EDAN INSTRUMENTS, INC

CE 0123

F6 Series

Fetal & maternal Monitor

User Manual

Manual Ver.: 1.1
Release Date: June 2008
Part No.: MS1R-109276-V1.1

Copyright

Statement

Edan Instruments, Inc. (hereinafter called EDAN) makes no warranty of any kind with regard to this material, including, but not limited to the implied warranties of merchantability and fitness for a particular purpose. EDAN assumes no responsibility for any error that may appear in this document, or for incidental or consequential damage in connection with the furnishing, performance or use of this material.

No part of this document may be photocopied, reproduced or translated to another language without prior written consent of EDAN.

All information contained in this publication is believed to be correct. EDAN shall not be liable for errors contained herein nor for incidental or consequential damages in connection with the furnishing, performance, or use of this material. This publication may refer to information and protected by copyrights or patents and does not convey any license under the patent rights of this company, nor the rights of others. This company does not assume any liability arising out of any infringements of patents or other rights of third parties.

The information contained in this document is subject to change without notice.

Responsibility of the Manufacturer

EDAN only considers itself responsible for any effect on safety, reliability and performance of the equipment if:

Assembly operations, extensions, re-adjustments, modifications or repairs are carried out by persons authorized by EDAN, and

The electrical installation of the relevant room complies with national standards, and

The instrument is used in accordance with the instructions for use.

NOTE: This device is not intended for home use.

⚠WARNING⚠: This device is not intended for treatment.

Upon request, EDAN may provide, with compensation, necessary circuit diagrams, and other information to help qualified technician to maintain and repair some parts, which EDAN may define as user serviceable.

Using This Label Guide

This guide is designed to give key concepts on safety precautions.

⚠WARNING⚠

A **WARNING** label advises against certain actions or situations that could result in personal injury or death.

CAUTION

A **CAUTION** label advises against actions or situations that could damage equipment, produce inaccurate data, or invalidate a procedure.

NOTE: A NOTE provides useful information regarding a function or a procedure.

Revision History

Date	ECO#	Version	Description
2008.01.16		V1.0	1st edition
2008.06.10	ECO-QR-8019	V1.1	Added model - F6 Express. Revised functions and interfaces appearance.

Table of Contents

Chapter 1 Installation Guidance

NOTE:

Installation must be carried out by qualified personnel authorized by EDAN. In order to ensure the operator and patient's safety, read through this chapter before using this monitor.

1.1 Instruction for the Safe Operation

- The F6 Series Fetal & maternal Monitor (hereinafter called F6 series monitor) is designed to comply with the international safety requirements IEC/EN 60601-1 for medical electrical equipment. It is class I equipment.
- F6 series Monitor operates within specifications at ambient temperatures between 5 ºC (41 ºF) and 40 ºC (104 ºF). Ambient temperatures that exceed these limits could affect the accuracy of the instrument and cause damage to the modules and circuits. Allow at least 2 inches (5 cm) clearance around the instrument for proper air circulation.
- You must check that the equipment, cables and transducers do not have visible evidence of damage that may affect patient safety or monitoring capability before use. The recommended inspection interval is once per week or less. If damage is evident, replacement is recommended before use.
- F6 series monitor must be serviced only by authorized and qualified personnel. EDAN do not accept responsibility for safety compliance, reliability and performance if modifications or repairs are carried out by unauthorized personnel. Identical replacement parts must be used.
- Perform periodic safety testing to insure proper patient safety. This should include leakage current measurement and insulation testing. The recommended testing interval is once per year.
- The protective categories against electric shock of the patient connections are:

1) Ultrasound (FHR1, FHR2) 2) External TOCO

3) Fetal Movement Mark (FM) 4) Fetal Stimulator (FS)

This symbol indicates that the electric shock defend grade of this instrument is Type B.

1) IUP 2) NIBP 3) SpO_2

This symbol indicates that the electric shock defend grade of this instrument is Type BF.

1) DECG 2) ECG 3) TEMP

This symbol indicates that the electric shock defend grade of this instrument is Type CF.

The monitor described in this user manual is not protected against:

a) The effects of defibrillator shocks

b) The effects of defibrillator discharge

c) The effects of high frequency currents

d) The interference of electrosurgery equipment

1.2 Opening the Package and Checking

Open the package; take out the monitor and accessories carefully. Keep the package for possible future transportation or storage. Check the components according to the packing list.

- Check for any mechanical damage.
- Check all the cables and accessories.

If there is any problem, contact us or your local distributor immediately.

1.3 Installing Battery

If your monitor has configured the rechargeable lithium-ion battery, follow these steps to install the battery:

(1) Battery Installation

- Carefully place the monitor upside down on a flat surface covered with cloth or other protecting pad.
- Remove the screws of the battery compartment using a cross-head screw driver.
- Remove the battery compartment cover.
- Take the battery out from package. Place the battery into the compartment with the wired direction at the outside. Refer to figure 1-1.
- Insert the cable connector into the socket.
- Shut the battery compartment cover and fix it with screws.

(2) Battery Removal

Fold the LCD display completely flat before turning the monitor upside down. Remove the battery in reverse order.

Figure 1-1 Installing battery

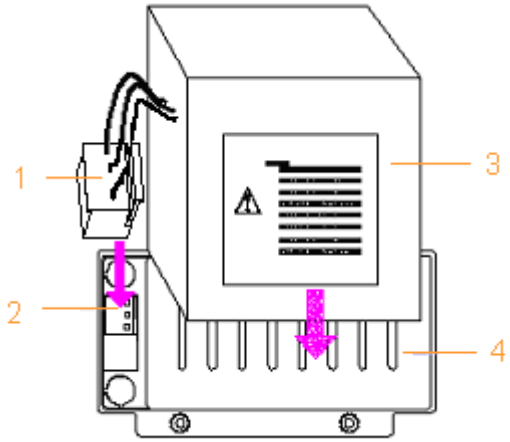

1 Battery Cable Connector
2 Battery Socket
3 Rechargeable Lithium-ion Battery
4 Battery Compartment

NOTES:

1) If charged battery is outfitted, charge it fully after using the device every time to ensure the electric power is enough.

2) When the battery configuration is provided, after the device is transported or stored, the battery must be charged. Switching on the monitor without connecting alternative current when the battery is not charged may cause the monitor out of work. Connecting to power supply will charge the battery no matter if the monitor is powered on.

3) Switch off the monitor and unplug the power cord before installing or removing the battery.

1.4 Loading Record Paper

If the monitor is used for the first time or record paper is run out, you should load paper.

- Press the two latches on each side of the paper drawer at the same tine and slide the drawer out carefully.
- Take out the “Z” type thermosensitive paper and remove the wrapper.
- Place the pack in the drawer, with the green safety band on the left.
- Unfold two sheets from the top of the pack and pull the end of the paper out on the edge of the drawer (make sure the pack in the drawer remain flat), refer to figure 1-2.
- Slide the drawer in until both the latches are locked. Figure 1-3 shows the final status of the record paper.

Figure 1-2 Placing the paper

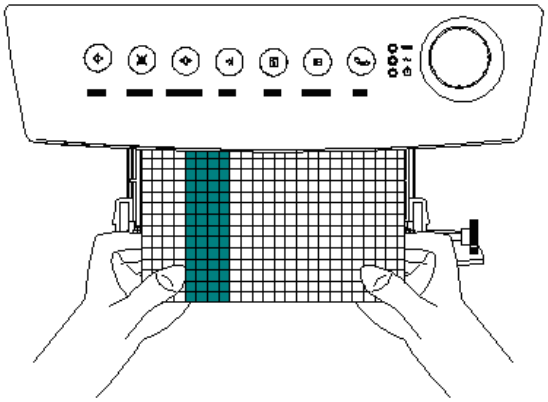

Figure 1-3 Final status of the paper

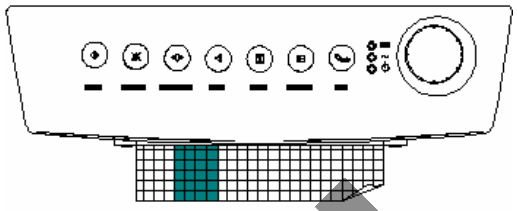

NOTES:

1) Be careful when inserting paper. Avoid damaging the thermosensitive print head.

2) The paper going out from the drawer should be aligned. Otherwise the data will be inaccurate or paper jam will happen.

3) Only use the paper EDAN approved to avoid poor printing quality, deflection, or paper jam.

4) Keep the drawer closed unless when loading paper or servicing.

Removing Paper Jam

When the recorder does not function or sound properly, open the drawer to check for a paper jam. Remove the paper jam in this way:

- Cut the record paper from the paper drawer edge.
- Pull out the paper.
- Reload paper.

1.5 Connecting the Power Cable

- Make sure the AC power supply of the monitor complies with the following specification: a.c.100V-240V, 50/60 Hz.
- Apply the power cable provided with the monitor. Plug one end of the power cable to the power socket of the monitor. Connect the other end to a grounded 3-phase power output special for hospital usage.

⚠WARNING⚠: If the protective grounding (protective earth) system is doubtful, the power of the monitor must be supplied by inner power only.

1.6 Ultrasound Safety Guide

Z Fetal Use

F6 series Monitor is designed for continuous fetal heart rate monitoring during pregnancy and labor. Clinical interpretation of fetal heart rate traces can diagnose fetal and/or maternal problems and complications.

Z Instructions for Use in Minimizing Patient Exposure

The acoustic output of F6 series monitor is internally controlled and can not be varied by the operator in the course of the examination. The duration of exposure is, however, fully under the control of the operator. Mastery of the examination techniques described in the User Manual will facilitate obtaining the maximum amount of diagnostic information with the minimum amount of exposure. The exercising of clinical judgment in the monitoring of low risk patients will avoid unnecessary insonation.

1.7 Safety Precautions

WARNING and **CAUTION** messages must be observed. To avoid the possibility of injury, observe the following precautions during the operation of the instrument.

⚠WARNING⚠:

For using safety:

- Z F6 series monitor is provided for the use of qualified physicians or personnel professionally trained. And they should be familiar with contents of this user manual before operation.
- Z Only qualified service engineers can install this equipment. Only service engineers authorized by EDAN can open the shell.
- Z This device is not intended for home use.
- Z **EXPLOSION HAZARD** - Do not use the F6 series monitor in a flammable atmosphere where concentrations of flammable anesthetics or other materials may occur.
- Z **SHOCK HAZARD** - the power receptacle must be a three-wire grounded outlet. A hospital grade outlet is required. Never adapt the three-prong plug from the monitor to fit a two-slot outlet. If the outlet has only two slots, make sure that it is replaced with a three-slot grounded outlet before attempting to operate the monitor.
- Z Do not apply this monitor and other ultrasonic equipment simultaneously on the same patient, in case of the possible hazard caused by leakage current superposition.
- Z Do not apply this monitor simultaneously and other PATIENT-connected equipment,

for example, a cardiac pacemaker or other electrical stimulators, on the same patient.

- Do not switch on device power until all cables have been properly connected and verified.
- Don't touch signal input or output connector and the patient simultaneously.
- Equipment and devices that connect to the monitor should form an equipotential body to ensure effective grounding.
- Disconnect power cord before changing fuse. Replace with the same rating and type only.
- **SHOCK HAZARD** - Do not attempt to connect or disconnect a power cord with wet hands. Make certain that your hands are clean and dry before touching a power cord.
- **SHOCK HAZARD** - Do not remove the top panel covers during operation or while power is connected. Only authorized service personnel could remove the unit cover.
- The monitor is not protected against defibrillation. Do not apply it during electro-surgery or MRI, otherwise it might result in harming the patient or the operator.
- Only connect accessories supplied or recommended by EDAN to the device.
- Accessory equipment connected to the analog and digital interfaces must be certified according to the respective IEC/EN standards (e.g. IEC/EN 60950 for data processing equipment and IEC/EN 60601-1 for medical equipment). Furthermore all configurations shall comply with the valid version of the system standard IEC/EN 60601-1-1. Everybody who connects additional equipment to the signal input connector or signal output connector configures a medical system, and is therefore responsible that the system complies with the requirements of the valid version of the system standard IEC/EN 60601-1-1. If in doubt, consult our technical service department or your local distributor.

For proper monitoring:

- This device is not intended for treatment.
- The fetal spiral electrode and intrauterine pressure catheter are disposable, discard them after single use.
- The IUPC is neither intended nor approved for measuring intrauterine pressure extraovularly; attempting to do so may lead to maternal discomfort or injury.
- Alarm must be set up according to different situation of individual patient. Make sure that audio sounds can be activated when an alarm occurs.

- Do not put the sensor on extremities with arterial catheter or venous syringe.
- Do not perform NIBP measurements on patients with sickle-cell disease or under any condition which the skin is damaged or expected to be damaged.
- Do not apply the cuff to a limb that has an intravenous infusion or catheter in place. This could cause tissue damage around the catheter when infusion is slowed or blocked during cuff inflation.

For using the battery:

- Before using the rechargeable lithium-ion battery (hereinafter called battery), be sure to read the user manual and safety precautions thoroughly.
- Don’t connect the battery cable connector or battery socket with metal objects, which can result in short circuit.
- Do not unplug the battery when monitoring.
- Do not heat or throw battery into a fire.
- Do not use, leave battery close to fire or other places where temperature may be above 60 ºC (140 ºF).
- Do not immerse, throw, and wet battery in water/ seawater.
- Do not destroy the battery: Do not pierce battery with a sharp object such as a needle; Do not hit with a hammer, step on or throw or drop to cause strong shock; Do not disassemble or modify the battery.
- Use the battery only in the F6 Monitor. Do not connect battery directly to an electric outlet or cigarette lighter charger.
- If the liquid leak from the battery gets into eyes, do not rub the eyes. Wash them well with clean water and see a doctor immediately.
- Don’t solder the leading wire and the battery terminal directly.
- If the liquid leak from the battery spills onto your skin or clothes, wash well with fresh water immediately.
- Keep away from fire immediately when leakage or foul odor is detected.
- Stop using the battery if abnormal heat, odor, discoloration, deformation or abnormal condition is detected during use, charge, or storage. Keep it away from the monitor.
- Do not use a battery with serious scar or deformation.
- When the battery’s useful life is over, contact with the manufacturer or local distributor for disposal or dispose the battery according to local regulations.

CAUTION:

- Refer servicing to qualified personnel.
- The device is designed for continuous and is “ordinary” (i.e. not drip or splash-proof).
- Keep the environment clean. Avoid vibration. Keep it far from corrosive medicine, dust area, high-temperature and humid environment.
- When installing the unit into a cabinet, allow for adequate ventilation, accessibility for servicing, and room for adequate visualization and operation.
- Do not operate the unit if it is damp or wet because of condensation or spills. Avoid using the equipment immediately after moving it from a cold environment to a warm, humid location.
- Sterility can not be guaranteed if package of the fetal spiral electrode is broken or opened.
- The fetal spiral electrode has been sterilized by gamma radial. Do not re-sterilize.
- Do not sterilize the monitor or any accessory with autoclave or gas.
- Switch off the system power before cleaning. Cleaning consists of removing all dust from the exterior surface of the equipment with a soft brush or cloth. Use a brush to dislodge any dirt on or around the connectors and panel edges. Remove dirt with a soft cloth, slightly dampened with a mild detergent solution or 70% ethanol or isopropranol.
- When washing the belts, the water temperature must not exceed 60 ℃ (140 ℉).
- **Electromagnetic Interference** - Ensure that the environment in which the F6 monitor is installed is not subjected to any source of strong electromagnetic interference, such as CT, radio transmitters, mobile phones base stations, etc.
- Do not use mobile phones nearby in the process of monitoring.
- The device and reusable accessories could be sent back to the manufacturer for recycling or proper disposal after their useful lives.
- While the battery is charged, used and stored, keep it away from objects or materials with static electric charges.
- If the terminals of the battery become dirty, wipe with a dry cloth before using the battery.
- The recommended charge temperature range is from 0 ℃ (32 ℉) to 40 ℃ (104 ℉). Do not exceed this range.
- Batteries have life cycles. If the time that the monitor using battery becomes much shorter than usual, the battery life is at an end. Replace the battery with a new one

same as the one provided or recommended by EDAN.

- When not using battery for an extended period, remove it from the monitor and store in a place with low humidity and low temperature.
- Remove a battery whose life cycle has expired from the monitor immediately.
- For information on installing and removing the battery from the monitor, thoroughly read the user manual.
- The useful life of the monitor is 5 years, dating from the manufacturing date marked on the bottom panel label.
- The device and reusable accessories could be sent back to the manufacturer for recycling or proper disposal after their useful lives.

1.8 Definitions and Symbols

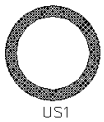

Socket for Channel 1 Ultrasound Transducer (for connection with ultrasound transducer, Protection Category B)

Socket for Channel 2 Ultrasound Transducer (for connection with ultrasound transducer, Protection Category B)

DECG Socket (for connection with DECG cable, Protection Category CF)

TOCO/IUP Socket (TOCO input socket-for connection with external contractions (TOCO) transducer, Protection Category B/ IUP input socket, for connection with intrauterine pressure connector, Protection Category BF)

Socket for Remote Event Marker (for connection with the marker, Protection Category B)

Socket for Fetal Stimulator (reserved)

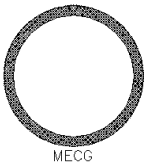

Socket for Maternal ECG Cable (Protection Category B)

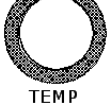

Socket for TEMP Transducer (Protection Category B)

NIBP	Socket for NIBP Cuff (Protection Category B)
SPO2	Socket for SpO_2 Transducer (Protection Category B)
	DB9 Interface
	RJ45 Interface
	Equipotential Grounding System
	Attention, Consult Accompanying Documents
	Type B Applied Part Symbol
	Type BF Applied Part Symbol
	Type CF Applied Part Symbol
CE 0123	This item is compliant with Medical Device Directive 93/42/EEC of June 14, 1993, a directive of the European Economic Community.
	This symbol indicates the equipment is place on the market after 13 August 2005. It should be disposed of only through a government approved collection scheme or treatment facility at end of life.
P/N	Part Number
SN	Serial Number
	Date Of Manufacture
	Manufacturer
EC REP	Authorized Representative in the European Community
	Recycle

Chapter 2 Introduction

NOTE: This user manual is written to cover the biggest configuration. Therefore, your model may or may not have some of the parameters and functions described, depending on what you have ordered.

2.1 Intended Use

The F6 and F6 Express fetal & maternal monitors are intended for monitoring physiological parameters of pregnant women during antepartum examination, labor and delivery. They are intended to be used only by trained and qualified personnel in antepartum examination rooms, labor and delivery rooms. They are not intended for use in intensive care units, operating rooms or for home use.

F6:

F6 is intended for providing Non-Stress testing or fetal monitoring for pregnant women from the 28th week of gestation.

The standard configuration of F6 monitor includes FHR1 (fetal heart rate 1), FHR2 (fetal heart rate 2), TOCO, MFM (manual fetal movement) and AFM (automatic fetal movement) monitoring.

That is to say, F6_standard = FHR1 + FHR2 + TOCO + MFM + AFM

Optionally you can add DECG (direct fetal electrocardiogram) and IUP (Intra-uterine Pressure) monitoring to it.

That is to say, F6_optional = FHR1 + FHR2 + TOCO + MFM + AFM + DECG + IUP

F6 Express:

F6 Express has all the fetal monitoring capabilities of F6. In addition, it provides a solution for maternal vital signs monitoring.

The standard configuration of F6 Express monitor includes standard configuration of the F6 monitor, plus the following maternal monitoring: ECG (maternal ECG), SpO_2 (oxygen saturation), HR (maternal heart rate), NIBP (non-invasive blood pressure) and TEMP (temperature) monitoring.

That is to say,
F6 Express_standard = F6_standard + ECG + SpO_2 + HR + NIBP + TEMP

A fetal stimulator can be provided to give a mild vibrating stimulation to the fetus. Refer to *FS-1 Fetal Stimulator User Manua*l for details.

A DB9 interface and a RJ45 interface are built in the monitor. With them, F6 series monitors can be connected to a computer or the MFM-CNS central monitoring system via 485 network or

Ethernet. Optionally, you can order a built-in wireless network module to connect the monitor via wireless network.

F6 series monitor adopts a 10.2” LCD, which displays the collected data, traces, and monitoring parameters on the same screen. The built-in thermal recorder prints the fetal traces. Rechargeable lithium-ion battery is provided for options.

2.2 Ordering Information

Accessories supplied or approved by EDAN can be used with the F6 series monitors. See the following table for details. The accessories employed by us, such as the rechargeable battery (model No.: HYLB) manufactured by HENGYU are products passed the authentication of CE, and they have the characteristics specified by their manufacturers.

Accessory (Spare Part)	**Part Number**
Ultrasound Transducer	MS3-109301
TOCO Transducer	MS3-31527
Remote Event Marker	MS3-31112
Belt	MS1-02264
Aquasonic Coupling Gel (0.25ltr bottle)	M50-78008
Fetal Stimulator	MS9-17660
DECG Cable	MS2-12148
Disposable Fetal Spiral Electrode	MS0-02145
Disposable Maternal Attachment Pad Electrode	MS0-02146
Intrauterine Pressure Connecting Cable	MS1-104151
Intrauterine Pressure Cable	MS1-104152
Disposable Intrauterine Pressure Catheter	MS1-104153
3-lead ECG Cable (American Standard)	M15-40028
3-lead ECG Cable (European Standard)	M15-40046
Attachment Pad Electrode	M15-40090
SpO_2 Transducer	MS3-109069
SpO_2 Transducer (Nellcor)	MS2-30043

NIBP Cuff (Upper Arm Perimeter 25cm, for Adult)	M15-40029
NIBP Cuff Extension Tube	M13-36036
TEMP Transducer	M15-40007
Thermosensitive Paper (GE-American)	M25R-75111
Thermosensitive Paper (GE-International)	M25R-75112
Thermosensitive Paper (Philips-American)	M25R-75113
Thermosensitive Paper (Philips-International)	M25R-75114
Fuse T1.6AL 250V	M21-64010
Rechargeable Lithium-ion Battery	M21R-064088

⚠**WARNING**⚠**: Only connect the accessories supplied or recommended by EDAN to the monitor.**

Chapter 3 Monitor and Accessories

3.1 Overview

Figure 3-1 F6 Appearance (for reference only)

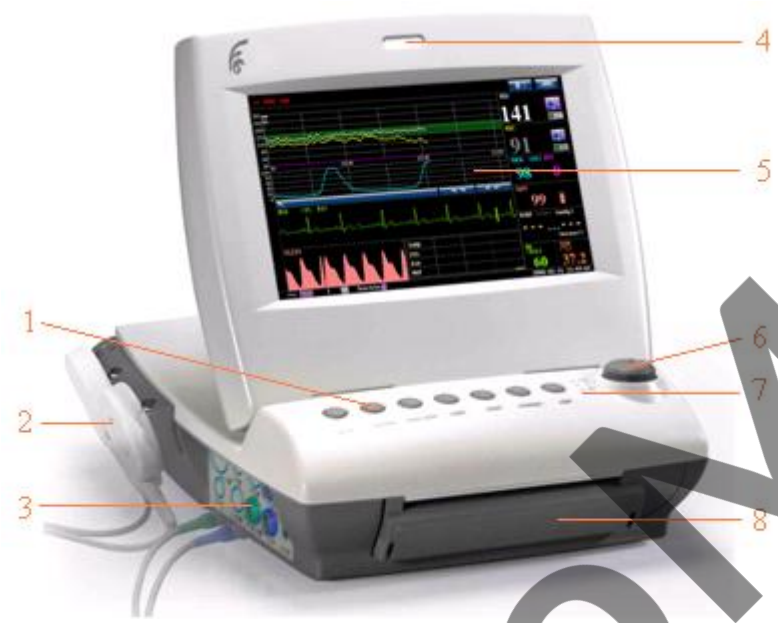

1 Keys
2 Transducer
3 Sockets
4 Alarm Indicator
5 Display Screen
6 Control Knob
7 Charge, AC, Power Indicator
8 Paper Drawer

Figure 3-2 Left Panel

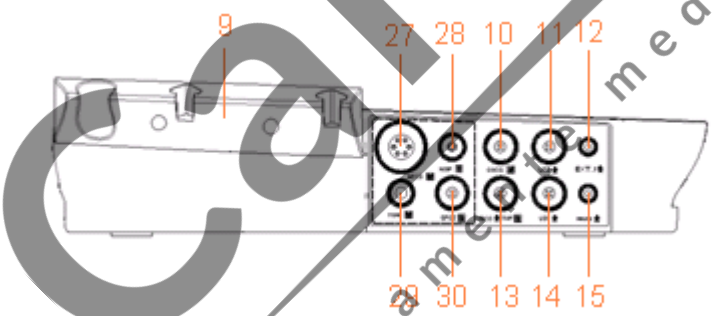

9 Transducer Holder
10 DECG Socket
11 US2 Socket
12 EXT.1 Socket
13 TOCO/IUP Socket
14 US1 Socket
15 MARK Socket
27 ECG Socket
28 NIBP Socket
29 TEMP Socket
30 SpO2 Socket

Figure 3-3 Right Panel

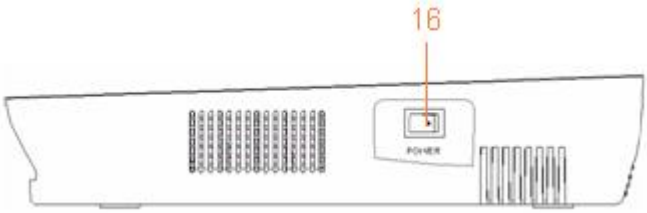

16 POWER Switch

Figure 3-4 Rear Panel

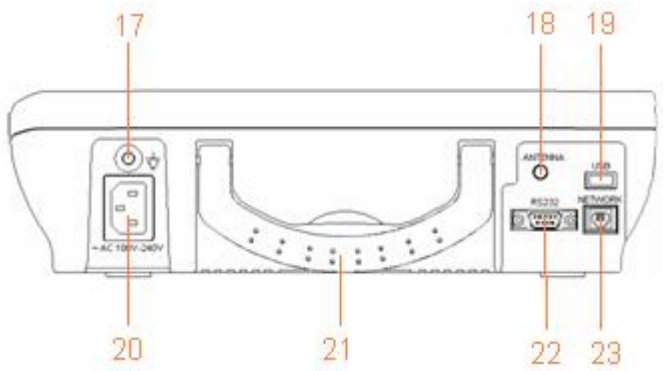

17 Equipotential Grounding Terminal

18 Antenna

19 USB Socket

20 Power Socket

21 Handle

22 DB9 Socket

23 RJ45Socket

Figure 3-5 Bottom Panel

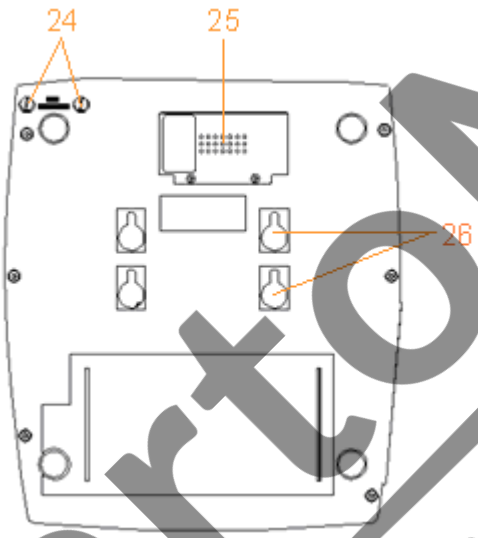

24 Fuses

25 Battery Compartment

26 Wall-mounting Holes

3.1.1 Keys and Control Knob

Figure 3-6 Keys and Control Knob

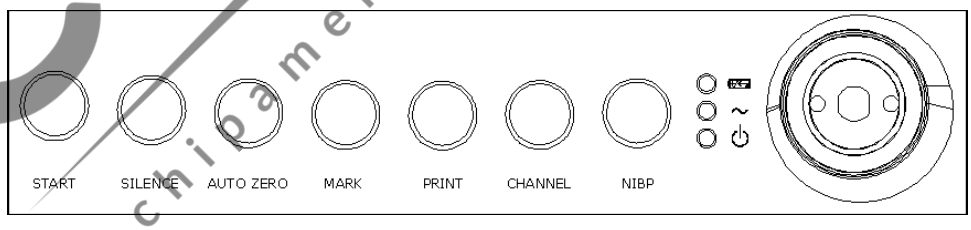

The Monitor is a user-friendly device with operation conducted by a few keys on the front panel and the control knob. Their functions are as follows:

(1) START

Function: Start monitoring and move back

Press this key to start monitoring (under the monitoring status) or move back to the previous

interface (under the login status or setting status).

(2) SILENCE

Function: Switch on/Switch off audible alarm
Press this key to toggle the audible alarm between on and off.

(3) AUTO ZERO

Function: TOCO zero

Adjust the external TOCO contractions trace/value to preset unit (external monitoring contractions) or the IUP trace/value to reference point 0 (internal monitoring contractions).

(4) MARK

Function: Record an event.
Press this key to make a mark for a patient event.

(5) PRINT

Function: Start / stop printing
Press this key to toggle between starting and stopping printing.

(6) CHANNEL

Function: Switch the channels
Press this key to toggle the FH sound between US1 channel and US2 channel.

(7) NIBP

Function: Start or stop a NIBP measuring.

Press this key to inflate the cuff and start a NIBP measurement. During the measuring process, this key can be pressed to cancel the measurement and deflate the cuff.

(8) CONTROL KNOB

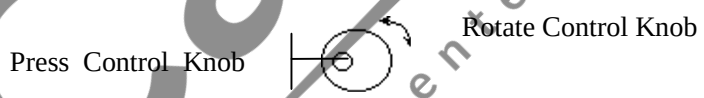

Function: Adjust volume, setup, login and review control.

It can be pressed like other keys and be rotated clockwise or counterclockwise. All the operations on the screen or in the menu are completed by using the control knob.

The rectangular mark on the screen that moves with the rotation of the control knob is called “cursor”. Operations can be performed at the position on the screen where the cursor stays.

Operation Procedure:

a) Rotate the control knob to move the cursor to the item you want;

b) Press the control knob;

c) One of the following three results will be achieved:

- A menu pops up on the screen, or the menu is replaced by a new one;
- The cursor pane turns into broken line pane and the background turns into blue, the content in the pane can be changed while rotating the control knob. At this time, rotate the knob until the needed item appears; press the knob to confirm selection.
- A certain function is performed immediately.

NOTE:

The word "select" hereinafter stands for rotating the control knob cursor to an item then pressing the knob.

CAUTION:

This monitor is a normal medical device, please avoid violent operations such as continuous pressing the keys or control knob.

3.1.2 Indicators

There are four groups of indicator on top of the screen and the front panel. From the top to down they are: alarm indicator, CHARGE indicator, AC indicator and Power indicator. Table 3-1 lists their meanings:

Table 3-1 Indicator description

Indicator		Status of Indicator	Meaning
	Alarm Indicator	Orange flash or light	An alarm is active.
		Green or off	No alarm is active.
	Charge Indicator	On	The battery is being charged.
		Off	No battery is loaded or the battery is fully charged
~	AC Indicator	On	The monitor is connected to AC power supply.
		Off	The monitor is not connected to AC power supply.
⏻	Power Indicator	On	The monitor is powered on.
		Off	The monitor is powered off.

3.2 Accessories

3.2.1 Transducers

Figure 3-7 Ultrasound (US) transducer

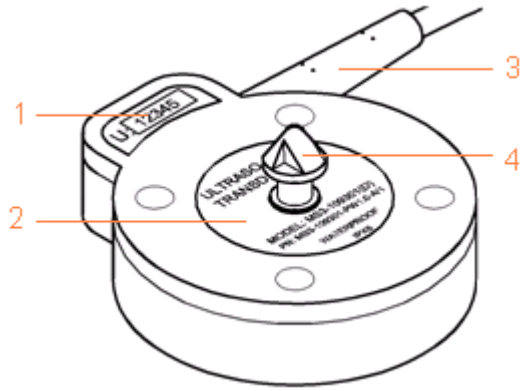

Figure 3-8 TOCO transducer

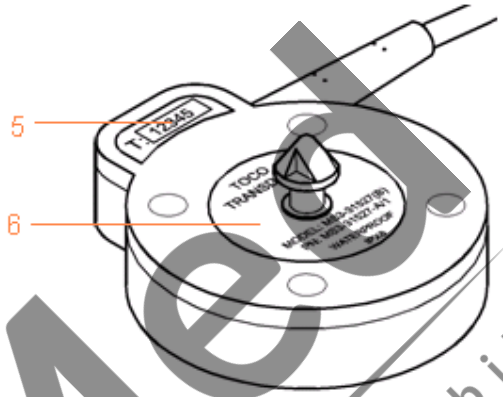

1 Serial number label of the US transducer, pink. U:xxxxx is the serial number.

2 Specification label of the US transducer, pink.

3 Transducer cable

4 Belt buckle

5 Serial number label of the TOCO transducer, blue. T:xxxxx is the serial number.

6 Specification label of the TOCO transducer, blue.

Information on the specification label includes:

PN: MS3-109301: Part number of this US transducer.

PN: MS3-31527: Part number of this TOCO transducer.

PW 1.0: pulsed wave, the central frequency of the US transducer is 1.0 MHz.

A/1: Version number of the transducer.

WATERPROOF: means the transducer is waterproof.

IPX8: means the transducer can work continuously for 5 hours under 1-metre water without being waterlogged.

CAUTION:

The waterproof parts of the US/TOCO transducer are restricted to the main body and the cable. Do not immerse the plug into any liquid in the process of monitoring or cleaning.

3.2.2 Remote Event Marker

Figure 3-9 Remote Event Marker

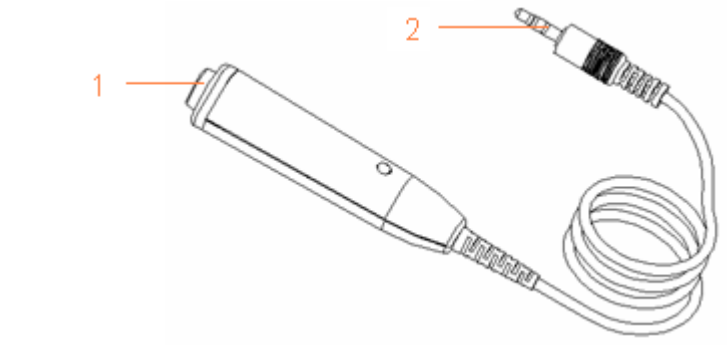

1 Key of the Remote Event marker
2 Plug of the Remote Event marker

3.2.3 Fetal Spiral Electrode

Figure 3-10 Fetal Spiral Electrode

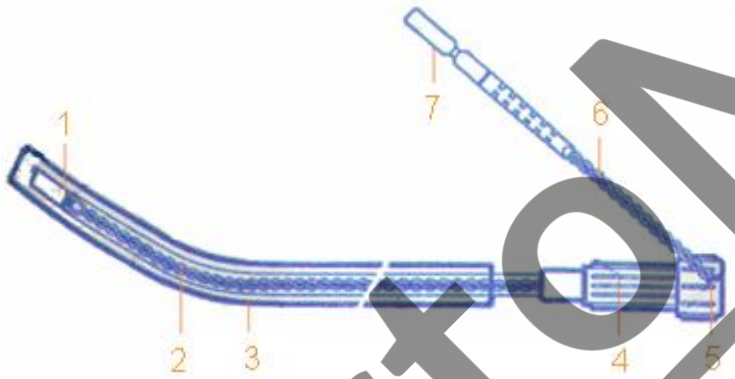

1 Reference Electrode
2 Drive Tube
3 Guide Tube
4 Drive Handle
5 Handle Notch
6 Electrode Wire
7 Safety Cap

3.2.4 Fetal Stimulator

Figure 3-11 Operating control of fetal stimulator

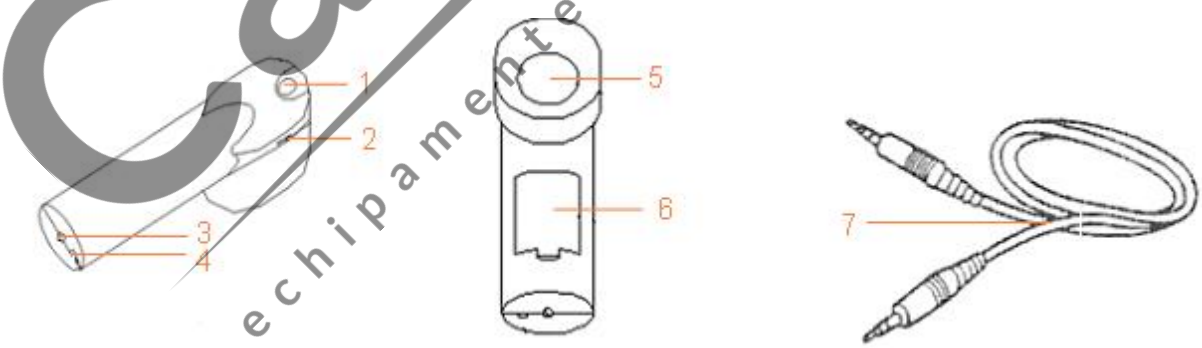

1	Operating Switch	2	Vibration Rhythm Adjusting Wheel
3	Marker Socket	4	Mode Selecting Switch
5	Vibrating Head	6	Battery Compartment
7	Audio Cable		

3.2.5 ECG Cable

Figure 3-12 3-Lead ECG cable

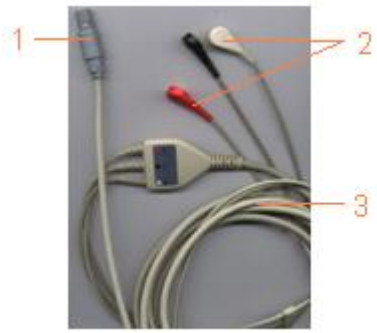

1 ECG Connector
2 Fastener
3 Lead Wire

3.2.7 SpO2 Transducer

Figure 3-13 SpO_2 Transducer

1 SpO_2 Sensor
2 SpO_2 Connector

3.2.8 NIBP Cuff

Figure 3-14 NIBP Cuff

1 Cuff Connector
2 NIBP Cuff

3.2.9 TEMP Transducer

Figure 3-15 TEMP Transducer

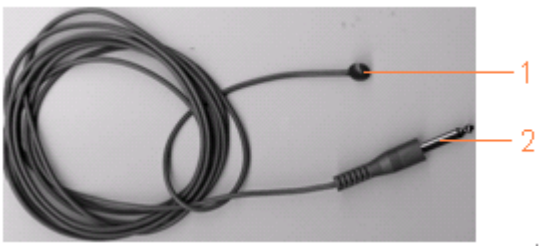

1 TEMP Sensor
2 TEMP Connector

3.3 Screen

3.3.1 Main Interface

Figure 3-16 Main Interface

The main interface of the monitor displays numbers, traces, menus and monitor status information. The screen background color has four choices: black (default), green, orange and blue.

To change the screen color,

1 Select setup key  in the main interface.

2 Select **General** ⇨ **GUI Color**.

3 Select the required color.

4 Select **OK**.

According to the content, the main interface is divided into four windows: (1) Message Window (2) Trace/ Menu Window (3) Numeric Window (4) Status Window.

(1) Message Window

a) 

:

Alarm messages displaying area. When an alarm is active, the message will be displayed here in red. Patient alarms will be displayed on the left and technical alarms in the center.

Alarm reviewing key. Select this key to open alarms reviewing menu.

b)  : **Login key.** Select this key to open login menu.

c)  : **Setup key.** Select this key to open setup menu.

(2) Trace/Menu Window

The trace/menu window occupies most space of the screen. When monitoring or reviewing, it displays traces; when setting, it displays setup menus.

The background pane bar supports two standards: 30 ~ 240 (American standard) and 50 ~ 210 (International standard).

The 120 ~ 160 bmp green band in between the fetal heart rate pane bars makes it easy to observe if the FHR exceeds this range.

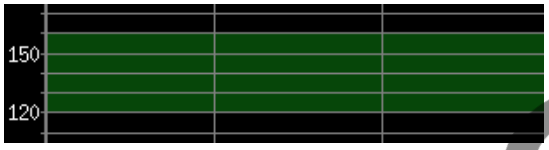

(3) Numeric Window

The fetal monitoring values and maternal vital signs are displayed here.

(4) Status Window

d) Power indicator

 - AC power supplied.

 - no AC power supplied.

e) Battery indicator

 - battery is loaded; the green pane indicates the charge of the battery.

 - no battery is loaded.

f) Network connection indicator

 - the monitor is on line.

 - the monitor is off line.

NOTE: The network connection indicator is not available if the net version is Insight or Philips.

g) 1 - device number.

h) Audio alarm indicator

 - the audible alarm is switched on.

 - the audible alarm is switched off.

i) 3cm/min - Print speed.

j) Recorder status indicator

 - the recorder is in the process of printing.

- no printing is going on.

k) The date and time of the monitor.

3.3.2 Setup Interface

The setup menu is provided to change the monitor configurations and monitoring settings. Press the Setup key in the main interface to open this menu. Take F6 Express setup menu as an example:

1 Setup Items

2 Function Description

You have access to all the setup items other than **System**. If no action is taken in 30 seconds, it will return to the upper directory.

Once you press **OK** to confirm setting changes, the new settings will be stored in the monitor's long-term memory. If the monitor is switched on again after being switched off or a power loss, it will restore the new settings.

For your reference, when the cursor is located at an item in this menu, F6 series monitor provides a brief function description of this item in a pane with blue frame under the items. For example, the cursor is located at "Fetus" in the above illustration. Correspondingly, its function "Set fetal monitoring items" is issued in the blue frame pane.

Chapter 4 Alarms

4.1 Alarms Classification

F6 monitor has two types of alarm: patient alarm and technical alarm.

Patient alarms indicate the situation of vital sign exceeding its configured limit. They can be disabled. The adjustable alarm limits determine the conditions that trigger the alarm.

Technical alarms indicate that the monitor can not measure and therefore not detect critical patient conditions reliably. When a patient alarm is switched off, the technical alarms relative to it will be disabled as well.

The alarms have two levels: middle and low. Middle level alarm is a serious warning, whose symbol is **; low level alarm is a general warning.

The middle level alarms have higher priority than the low level alarms. If both types of alarms are active at the same time, the monitor sounds an audible indicator for the middle level alarms.

The system configures all patient alarms as middle level and all technical alarms as low level, you can not change them.

4.2 Audible Alarm

When an alarm condition is active, the monitor gives out an alarm sound (the sound pressure range is 45 ~ 85dB).

Middle level alarm: a “Do” tone is repeated three times, followed by a pause.

Low level alarm: a “Do” tone is issued, followed by a pause.

Press the **SILENCE** key on the front panel to toggle the audible alarm between on and off. Meanwhile, the audible alarm indicator on main interface will toggle between  and  . However, the alarm messages will still be displayed and the alarm indicator will still be lighted up when an alarm condition is active.

⚠WARNING⚠:

Do not disable the audible if endangering the patient’s safety.

4.3 Visual Alarm

When an alarm condition is active,

- the alarm indicator flashes in orange with a frequency of 0.67Hz if it is a middle level alarm; the alarm indicator lights up continuously in orange if it is a low level alarm.

- the alarm message appears in the message window of the main interface in red, with patient alarms on the left and technical alarms in the middle.

- the measurement value flashes in grey with a frequency of 1Hz.

When more than one alarm condition is active, the alarm messages appear at the same area in succession.

The patient alarm messages are displayed either:

- in text form, for example "** FHR2 LOW"; or
- in numeric form, for example "** FHR2 115 < 120"; ** indicates this is a middle level alarm event; the first number is the current measurement result; the second number is the preset alarm limit.

The technical alarm messages are displayed in entire text form, for example "Fetus EQUIP MALF".

The table below summarizes the above features:

Alarm Type	Patient Alarm	Technical Alarm
Level	Middle	Low
Symbol	**	
Alarm Tone	A "Do" tone is repeated three times, followed by a pause.	A "Do" tone is issued, followed by a pause.
Audio Alarm On/Off Indicator	: Audio alarm is enabled. : Audio alarm is disabled.	
Indicator	Flashes in orange with a frequency of 0.5Hz.	Lights up continuously in orange.
Alarm Message Form	Text form, for example "** FHR2 LOW"; or Numeric form, for example "** FHR2 115 < 120".	Text form, for example "Fetus EQUIP MALF".

4.4 To Choose Alarm Display Form

You can change the patient alarm display form,

1 Select setup key in the main interface.

2 Select **Alarm** ⟹ **Display Form**.

3 Select **Text** (default) or **Numeric**.

4 Select **OK**.

4.5 To Review Alarms

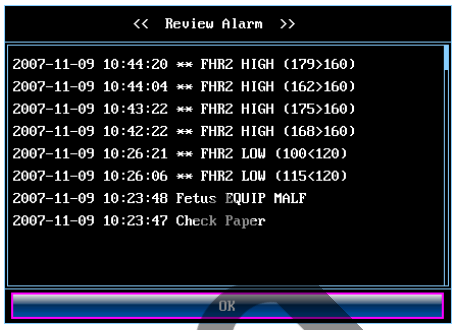

An alarm reviewing menu records a list of up to 50 the most recent patient and technical alarm messages with date and time information.

Select the alarm reviewing key in the message window to open this menu.
You can select the alarms list then rotate the control knob to review more alarms.

Select **OK** to exit from this menu.

4.6 Alarm Treatment Measures

When the monitor gives out alarm and catches your attention, you should:

- Check the patient's condition.
- Identify the cause of the alarm.
- Silence the alarm if necessary.
- Check if the alarm is terminated when the alarm condition is solved.

4.7 To Test Alarms

To test the function of visible and audible alarms, do the following:

1 Switch on the monitor.
2 Enable the alarm.
3 Set the alarm limits to a small range.
4 Stimulate a signal that is higher than the upper limit or lower than the lower limit. Or disconnect one of the plugs.
5 Verify if the visible and audible alarms are working properly.

4.8 Alarm Defaults

Alarm Setting	Options	Default
FHR1/FHR2 Alarm	On, Off	On
FHR1/FHR2 Lower Limit	50 ~ 205 bpm, adjustable in 5 bpm steps	120 bpm

FHR1/FHR2 Upper Limit	55 ~ 210 bpm, adjustable in 5 bpm steps	160 bpm
FHR1/FHR2 Alarm Delay	0 ~ 300 second(s), adjustable in 5 seconds steps	10 seconds
FHR1/FHR2 Alarm Level	Middle, not adjustable	Middle
SpO_2 Alarm	On, Off	On
SpO_2 Lower Limit	50 ~ 99%, adjustable in 1% steps	90%
SpO_2 Upper Limit	51 ~ 100%, adjustable in 1% steps	100%
SpO_2 Alarm Delay	0 second, not adjustable	0 second
SpO_2 Alarm Level	Middle, not adjustable	Middle
HR Alarm	On, Off	On
HR Lower Limit	30 ~ 239 bpm, adjustable in 1 bpm steps	50 bpm
HR Upper Limit	31 ~ 240 bpm, adjustable in 1 bpm steps	120 bpm
HR Alarm Delay	0 second, not adjustable	0 second
HR Alarm Level	Middle, not adjustable	Middle
NIBP Alarm	On, Off	On
SYS Lower Limit	30 ~ 269 mmHg, adjustable in 1 mmHg steps	90 mmHg
SYS Upper Limit	31 ~ 270 mmHg, adjustable in 1 mmHg steps	160 mmHg
SYS Alarm Delay	0 second, not adjustable	0 second
SYS Alarm Level	Middle, not adjustable	Middle
DIA Lower Limit	10 ~ 244 mmHg, adjustable in 1 mmHg steps	50 mmHg
DIA Upper Limit	11 ~ 245 mmHg, adjustable in 1 mmHg steps	90 mmHg
DIA Alarm Delay	0 second, not adjustable	0 second
DIA Alarm Level	Middle, not adjustable	Middle
MAP Lower Limit	20 ~ 254 mmHg, adjustable in 1 mmHg steps	60 mmHg
MAP Upper Limit	21 ~ 255 mmHg, adjustable in 1 mmHg steps	110 mmHg
MAP Alarm Delay	0 second, not adjustable	0 second
MAP Alarm Level	Middle, not adjustable	Middle
TEMP Alarm	On, Off	On
TEMP Lower Limit	0.0 ºC ~ 49.9 ºC, adjustable in 0.1 ºC steps	36.0 ºC
TEMP Upper Limit	0.1 ºC ~ 50.0 ºC, adjustable in 0.1 ºC steps	39.0 ºC
TEMP Alarm Delay	0 second, not adjustable	0 second
TEMP Alarm Level	Middle, not adjustable	Middle

Chapter 5 Printing

5.1 Function Description

The built-in thermal recorder applied in the F6 series monitor supports both the American and international standard wide record papers. It prints continues FHR1/ FHR2 /TOCO /AFM traces synchronously along with the FHR1 mark, FHR2 mark, FM marks, event marks and zeroing marks.

F6 series monitor supports some other functions listed below:

- **Auto start printing:** If the function is enabled, the recorder starts printing automatically when a new monitoring starts (the **START** key is pressed). Otherwise you have to press the **PRINT** key to start printing.
- **Certain time printing:** The recorder prints traces of certain time length every time. This length is adjustable. A music sound will be heard at the end of every period printing.
- **Remaining time indicating:** A print remaining time appears next to the recorder status indicator in the status window, unless the time length is 0.
- **Fast printing:** The recorder prints the data saved in the monitor at a high speed (up to 25mm/s).
- **Data Caching:** When the paper drawer is run out of paper or when it is open, the recorder stops printing. The data from this time on (at most 60 minutes) will be temporarily saved in the internal memory. When new paper is loaded and/or the drawer is closed, the saved data will be printed out at a high speed. When the saved trace has been printed out, the recorder switches back to continue printing the current data at the normal speed automatically.

NOTE:

When the monitor is switched off, the data in the internal memory will be lost.

- **FHR2 offset:** You can set the offset of the FHR2 trace to separate the two FH traces on the screen and the record paper.
- **Print self-test:** The recorder prints a baseline for self testing when the monitor is switched on.

5.2 Printing Configuration

⚠WARNING⚠:

All the parameters should be well configured before printing starts. You can not change the configuration in the process of printing.

5.2.1 To Switch Auto-Printing On and Off

1 Select setup key in the main interface.
2 Select **Start Monitor** ⇨ **Printing**.
3 Select **ON** or **OFF** (default).
4 Select **OK**.

5.2.2 To Choose the Paper Speed

1 Select setup key in the main interface.
2 Select **Recorder** ⇨ **Print Speed**.
3 Select **1 cm/min**, **2 cm/min** or **3 cm/min** (default).
4 Select **OK**.

5.2.3 To Choose the Time Length

1 Select setup key in the main interface.
2 Select **Recorder**.
3 Select **Length [min]** from 0 to 250; the step is 5 and the default length is 0. 0 stands for there is no time limit, the recorder will not stop until the **PRINT** key is pressed.
4 Select **OK**.

5.2.4 To Switch Print Self-Test On and Off

1 Select setup key in the main interface.
2 Select **Recorder** ⇨ **Print Self-Test**.
3 Select **ON** or **OFF** (default).
4 Select **OK**.

5.3 Understanding the Printed Record Paper

Figure 5-1 is an example of the record paper with traces. Comparing with the monitor screen, you can find this extra information on it:

Paper vendor – "F9-G" indicates the paper vendor is GE. "F9-P" indicates the paper vendor is Philips.

Paper Style – The FHR pane range 30 ~ 240 bpm indicates the paper style is American Standard. The FHR pane range 50 ~ 210 bpm indicates the paper style is International Standard.

FHR1 Mark – The thick FHR trace marked with "FHR1" indicates this trace is FHR1 trace.

FHR2 Mark – The thin FHR trace marked with "FHR2" indicates this trace is FHR2 trace.

Numeric List – A list of current date, time, print speed, ID, FHR2 offset, HR, SpO_2, SYS, DIA, MAP and TEMP is printed at the start of a monitoring and every ten minutes afterwards.

Page Mark – Each record paper pack has 150 pages. When you notice the page mark comes to the end, remember to load new paper in time.

Figure 5-1 An Example of Record Paper with Traces

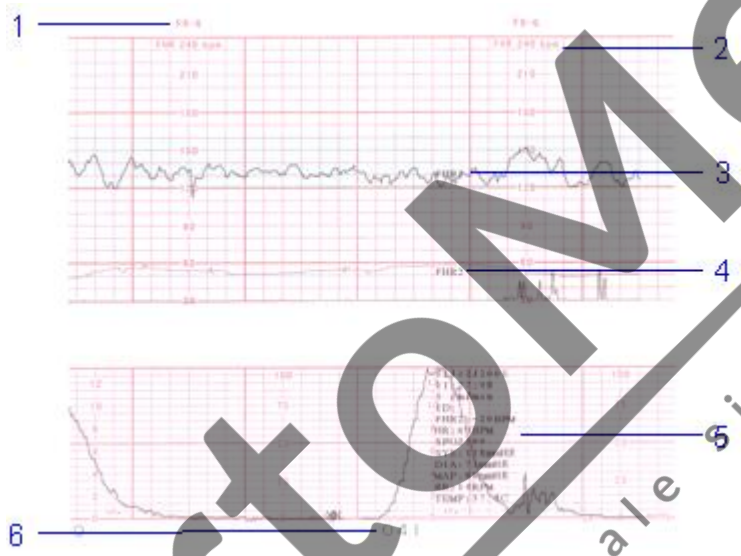

1 Paper Vendor
2 **Paper Style**
3 FHR1 Mark
4 FHR2 Mark
5 Numeric List
6 Page Mark

Chapter 6 Pre-Monitoring Preparation

6.1 Switching On the Monitor

⚠WARNING⚠: Check if all the metal parts are linked to the protective earth cord and the cord is working well before powering on the monitor.

⚠WARNING⚠: If any sign of damage is detected, or the monitor displays some error messages, do not use it on any patient. Contact biomedical engineer in the hospital or our service engineer immediately.

Press the power switch on right panel to switch on the monitor. The power indicator lights up and a switching-on sound will be heard. You can operate the monitor after the main interface appears.

If **Print Self-Test** in the menu is ON, the recorder will print a baseline. Observe the starts and ends of the printed baselines (illustrated with the arrow). The starts and ends should be printed exactly on the edges of the pane if the record paper is correctly loaded and set. If they do not comply with the edges, reload paper or ask the service engineer to change the paper setup of the monitor.

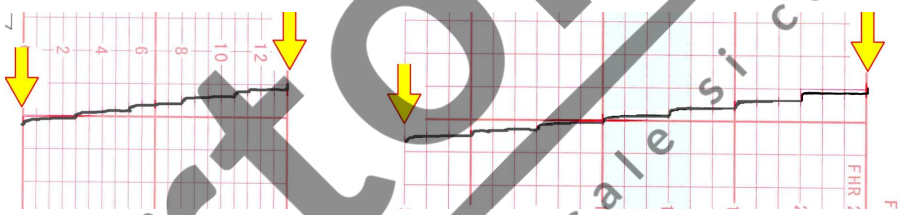

NOTE: Check all the functions to make sure that the monitor is in good condition.

6.2 Adjusting the Screen Angle

The angle between the screen and the top cover of the monitor is adjustable as needed, allowing it to be mounted on a wall or placed on a flat surface.

Adjustment method:

Push the hook on top of the screen left to spring it open. Pull the screen forward to adjust to preset screen angles of 31, 44 and 53 degrees. To bring the screen back to flat, pull it all the way forward then push it back. Refer to figure 6-1.

Figure 6-1 Screen adjustment

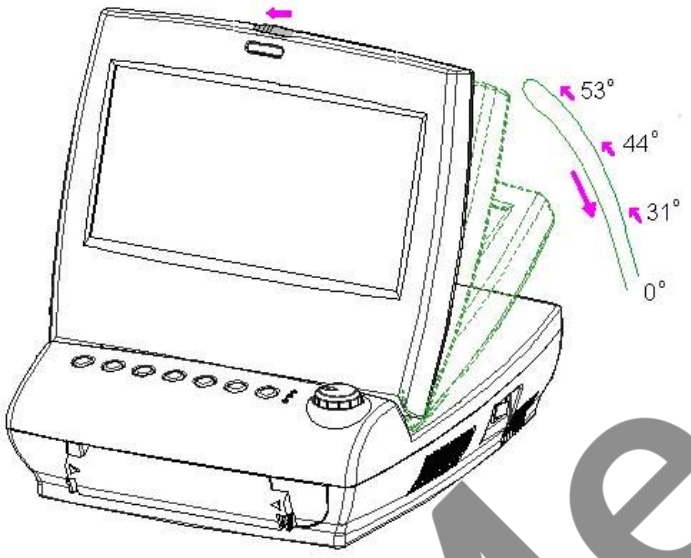

6.3 Setting Date and Time

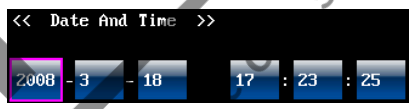

1 Select setup key  in the main interface.

2 Select **Date and Time**.

3 Set the year, month, date, hour, minute and second from left to right.

3 Select **Date Format** for the format of the date on main interface; yyyy-mm-dd (default), mm/dd/yyyy and dd/mm/yyyy are at choice.

4 Select **OK**.

NOTE:

The date and time remain in the monitor after it switches off for at least two months. You do not have to set date and time before every monitoring.

6.4 Connecting Transducers

Check for visible damages of the transducers every time before connecting them to the monitor. Pay special attention to the cracks on the transducers and cables before immersing them into conductive fluid. If damage is found, replace them with good ones at once.

When plugging transducers into the monitor, make sure the arrow symbol of the connector is facing up, refer to figure 6-2.

Figure 6-2 Connecting the transducer

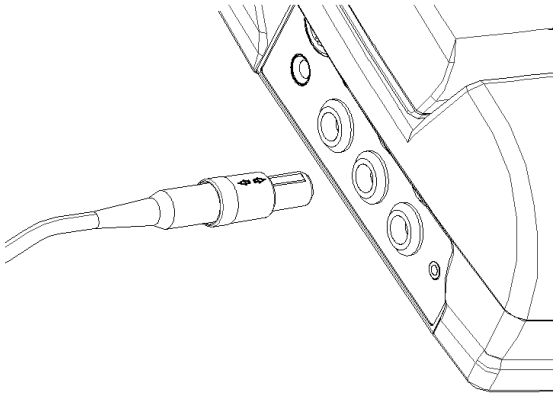

When disconnecting a transducer, hold the afterbody of the transducer outshell (the shaded part shown in figure 6-3) with fingers and push it in slightly, then pull it out. Refer to figure 6-3.

Figure 6-3 Disconnecting the transducer

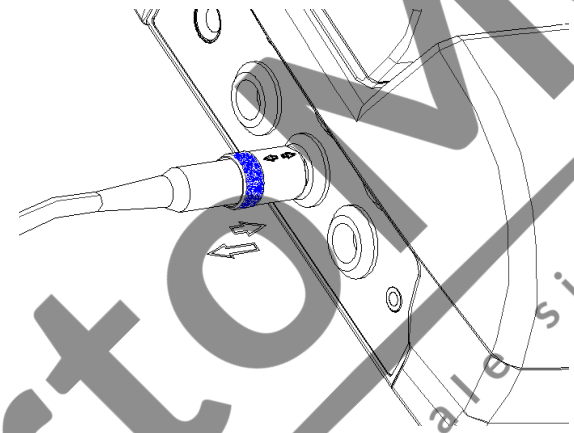

6.5 Adjusting the Volume

The monitor automatically detects which channel the ultrasound transducer is connected to. The corresponding volume adjustment key of this channel displays  , indicating the FH sound is coming out from this channel, for example: 

; while the other one displays  , for example: 

. Press the **CHANNEL** key to switch the FH sound to the other channel.

Adjust the default monitoring volume:

The FH volume returns to a default level in a new monitoring after the **START** key is pressed. This default level is adjustable. To change this level,

1 Select setup key  in the main interface.
2 Select **Start Monitor** ⇨ **Volume** .
3 Select the volume from 0~9; the step is 1 and the default level is 3.
4 Select **OK**.

Adjust the real-time monitoring volume:

If the default volume level is not satisfied when monitoring, you can adjust the real time volume of each channel.

1 Select the volume adjustment key  in the main interface.
2 Rotate the control knob clockwise for one step, the volume increases by one level, there are 10 levels at choice; the green pane of the volume level indicator  increases by one at every two steps; rotate the knob anticlockwise to decrease the volume.
3 Press the knob again to confirm the volume level.

Adjust the key volume:

The volume of pressing keys, rotating and pressing the control knob is also adjustable.

1 Select setup key  in the main interface.
2 Select **Fetus** ⇨ **Beep Volume**.
3 Select **Low** (default), **High** or **OFF**.
4 Select **OK**.

Chapter 7 Fetal Monitoring

⚠WARNING⚠:

- **The monitor is not intended for use in intensive care units (ICU), operating rooms or for home use.**
- **The monitor is not protected against defibrillation. Do not apply it during electro-surgery or MRI, otherwise it might result in harming the patient or the operator.**

7.1 Confirming Fetal Life

Fetal monitoring with ultrasound or DECG can not differentiate a fetal heart rate signal source from a maternal heart rate source in all situations. These are some of the signal sources that might be taken as FHR signal source by mistake:

- High maternal heart rate signal.
- Maternal aorta or other large vessels signals.
- Electrical impulse from the maternal heart transmitted through a recently deceased fetus.
- Movement of the deceased fetus during or following maternal movement.

So you need to confirm fetal life by other means before starting to use the fetal monitor, such as using a fetoscope, stethoscope, Pinard stethoscope or obstetric ultrasonography.

7.2 Monitoring FHR with Ultrasound

The ultrasound monitoring is a method to obtain FHR on maternal abdominal wall, which can be used for antepartum monitoring. Place the FHR transducer on maternal abdomen, it will transmit low energy ultrasound wave to the fetal heart, and receive the echo signal.

7.2.1 Parts Required

1) Ultrasound transducer 2) Aquasonic coupling gel 3) Belt

7.2.2 FHR Monitoring Procedure

1) Placing Transducer Belt

Place the transducer belts across the bed.

Lie the patient on the bed with her abdomen over the belts.

2) Acquiring FH Signal

Search for the location of the fetal heart using a stethoscope or a fetoscope.

Apply certain amount of acoustic gel on the transducer and move it slowly around the fetus site until a clear characteristic hoof-beat sound of the fetal heart is heard. Refer to figure 7-1 for the transducer position.

Figure 7-1 Ultrasound transducer & TOCO transducer positioning (single fetus)

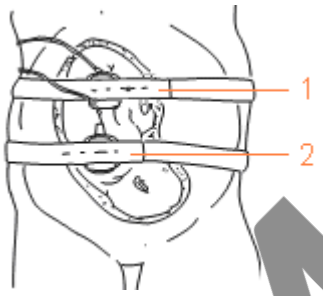

1 Measure TOCO
2 Measure FHR

3) Fixing the Transducer

Wrap the abdomen with the belt over the transducer. Fix the transducer by pushing its buckle through the overlapping section of the belt.

Make sure the belt is neither too tight nor too loose and the patient is monitored comfortably. Meanwhile, fetus heart beat sound is heard; the FHR trace and value are displayed on the screen.

NOTES:

1) Do not mistake the high maternal heart rate for fetal heart rate.

2) The best quality records will only be obtained when the transducer is placed in the optimum position.

3) Positions with strong placental sounds (swishing) or fetal cord pulse (indistinct pulse at fetal rate) should be avoided.

4) If the fetus is in the cephalic position and the mother is supine, the clearest heart sound will normally be found on the midline below the umbilicus. During monitoring prolonged lying in the supine position should be avoided owing to the possibility of supine hypotension. Sitting up or lateral positions are preferable and may be more comfortable to the mother.

5) It is not possible to measure FHR unless an audible fetal heart signal is present. The fetal pulse can be distinguished from the maternal pulse by feeling the mother's pulse during the examination.

7.2.3 To View FHR Alarm Settings

Always check if the alarm settings are appropriate for your patient before starting a monitoring. To view the present FHR alarm setting,

1 Select setup key  in the main interface.
2 Select **Fetus Alarm**.

In the FHR alarm setup menu, it shows:

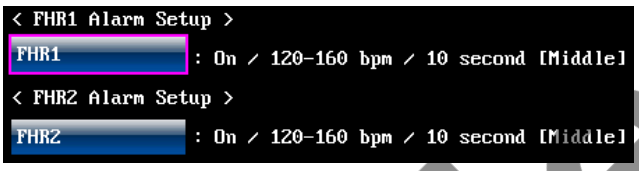

On/Off: The FHR alarm is switched on or off.

120 – 160 bpm: The preset FHR alarm lower limit and higher limit.

10 second: The preset FHR alarm delay.

7.2.4 To Switch the FHR Alarm On or Off

If the fetal heart alarm is switched off, the monitor will no longer give any audible or visual warning for this monitoring item.

1 Select setup key  in the main interface.
2 Select **Fetus Alarm** ⇨ **FHR1** or **FHR2** ⇨ **Alarm**.
3 Select **On** (default) or **OFF**.
4 Select **OK**.

If FHR1 or FHR2 alarm is switched off, an alarm switched-off symbol  will appear in the numeric window. For example:

⚠**WARNING**⚠:

Do not switch the alarm off if endangering the patient's safety.

7.2.5 To Change the FHR Alarm Limits

The alarm limits you set determine the conditions that trigger the alarm.

1 Select setup key  in the main interface.
2 Select **Fetus Alarm** ⟹ **FHR1** or **FHR2**.
3 Select **Lower Limit** from 50 ~ 205 bpm; the step is 5 and the default is 120 bpm.
4 Select **Upper Limit** from 55 ~ 210 bpm; the step is 5 and the default is 160 bpm.
5 Select **OK**.

7.2.6 To Change the FHR Alarm Delay

The alarm delay indicates how long the measured result continues exceeding its limit before the alarm is triggered.

1 Select setup key  in the main interface.
2 Select **Fetus Alarm** ⟹ **FHR1** or **FHR2** ⟹ **Alarm Delay**.
3 Select alarm delay from 0 ~ 300 second(s); the step is 5 and the default is 10 seconds.
4 Select **OK**.

7.3 Monitoring FHR with DECG (F6 - Optional)

7.3.1 Contraindications

The fetal spiral electrode can be used when amniotic membranes adequately ruptured and sufficient cervical dilatation assured. The fetal electrode tip is designed to penetrate the epidermis of the fetus; therefore, trauma, hemorrhage and/or infection can occur. The electrode should be used with strict adherence to aseptic technique.

The fetal spiral electrode should not be applied to the fetal face, fontanels or genitalia.

Do not apply when placenta previa is present; when the mother has visible genital herpes lesions or reports symptoms of prodromal lesions; when the mother is HIV sero-positive; when mother is a confirmed carrier of hemophilia and the fetus is affected or of unknown status; or when it is not possible to identify fetal presenting part where application is being considered. This method is not recommended when fetus is extremely premature, or in the presence of a maternal infection such as Hepatitis B, Group B hemolytic strep, syphilis or gonorrhea, unless a clear benefit to the fetus or mother can be established.

7.3.2 Parts Required

1) DECG cable 2) Fetal spiral electrode 3) Disposable Maternal Attachment Pad Electrode

7.3.3 Prepare the Patient's Skin Prior to Placing Electrodes

The skin is a poor conductor of electricity; therefore preparation of the patient's skin is important to facilitate good electrode contact to skin.

- Shave hair from electrode sites, if necessary.
- Wash the sites thoroughly with soap and water. (Do not use ether or pure alcohol, which will increase skin impedance)
- Rub the skin briskly to increase capillary blood flow in the tissues.
- Remove skin scurf and grease.

7.3.4 Directions for Using Fetal Spiral Electrode

1. With the patient in the dorsal lithotomy position, perform a vaginal examination and clearly identify the fetal presenting part.
2. Tear open the package and take out the spiral electrode; leave the electrode wires locked in the handle notch.
3. Gently bend the guide tube to the desired angle.
4. Hold the drive handle, ensure the spiral electrode is retracted about one inch (2.5 cm) from the distal end of the guide tube.
5. Place the guide tube firmly against the identified presenting part.
6. Maintain pressure against the fetal presenting part with guide and drive tubes. Rotate the drive tube by rotating the drive handle clockwise until gentle resistance is encountered. Resistance to further rotation and recoil of the drive handle indicates that the spiral electrode is well attached to the fetus.
7. Release the electrode wires from the handle notch and straighten them. Slide the drive and guide tubes off the electrode wires.
8. Insert the safety cap into DECG cable.

Figure 7-2 The well attached fetal spiral electrode

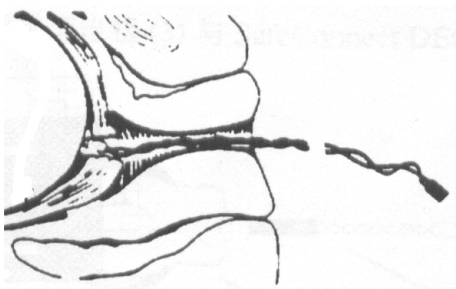

7.3.5 DECG Monitoring Procedure

1 Perform a vaginal examination to identify the fetal presenting part.

2 Prepare the patient's skin using the procedures described in section 7.3.3.

3 Attach the fetal spiral electrode to the fetal presenting part using the procedures described in section 7.3.4.

4 Fix an attachment pad electrode to DECG cable.

5 Remove the film on back of the electrode and place the electrode on maternal thigh; press it firmly in place.

6 Connect the fetal spiral electrode to the DECG cable.

7 Insert connector of DECG cable into the DECG socket of the monitor.

⚠WARNING⚠:

Do not plug the fetal spiral electrode wire in the power socket.

◈CAUTION◈:

Do not mistake the higher maternal heart rate for DECG.

NOTE:

1) If there is any doubt as to the presence of a fetal heart signal with ECG, check with the US transducer on the patient's abdomen or with a separate diagnostic instrument. The presence of an audible Doppler heart sound at a rate distinct from that of the maternal pulse is unequivocal evidence of the fetal life.

2) After the electrode is well attached, allow a few minutes for the electrode and fetal tissue to become stabilized. It is essential that the ECG signal electrode is in good contact with the fetal presenting part.

7.3.6 Detach the Fetal Spiral Electrode

To detach the fetal spiral electrode, rotate it counterclockwise until it is free from the fetal presenting part. Do not pull the electrode from the fetal skin forcefully.

Dispose the used fetal spiral electrode in proper way. Do not use it again.

7.4 Monitoring Twin FHRs

7.4.1 Monitoring Twins Externally

To monitor twin FHRs externally, you need connect a US transducer to US1 socket and the second US transducer to US2 socket of the monitor. Follow the instructions described in Section

7.2 to acquire FHR signals for both channels. Press **CHANNEL** key to switch the FH sound from one channel to the other.

When the two US transducers are fixed, make sure FH sound from both channels are clear, two FHR traces and two FHR values are displayed on the screen.

7.4.2 Monitoring Internally (F6-Optional)

Alternatively, you can monitor a FH using ultrasound externally, and monitor the second FH using DECG internally.

Connect the US transducer to US1 socket; connect DECG cable to DECG socket.

Monitor one twin with US transducer using procedures described in Section 7.2.

Monitor the second twin with DECG cable using procedures described in Section 7.3.

CAUTION:

The US transducer must be connected to US1 socket. If the US transducer connects to US2 socket while DECG cable is connected to DECG socket, the FHR trace and value from US2 will not be displayed.

7.4.3 Signals Overlap Verification (SOV)

If the two US transducers are aiming at the same fetal heart, or the US transducer is aiming at the fetus that the fetal spiral electrode is attached to, an alarm message “Signals Overlap” will appear on the screen to warn you.

If you are monitoring externally, adjust one of the transducers’ position to find the second fetal heart.

If you are monitoring internally, adjust the US transducer’s position to find the second fetal heart.

7.4.4 To Change FHR2 Offset

In order to distinguish FHR1 trace and FHR2 trace, FHR2 offset is provided to help you separating the two traces by an offset of -20 bpm or +20 bpm.

1 Select setup key  in the main interface.
2 Select **Recorder** ⇨ **FHR2 Offset**.
3 Select **-20 bpm** (default), **0 bpm** or **+20bpm**.
4 Select **OK**.

This preset FHR2 offset will be printed on the record paper every 10 minutes.

"Offset: -20bpm": the FHR2 trace is 20bpm lower than it really is.

"Offset: 0bpm": the FHR2 trace is staying at where it real is.

"Offset: +20bpm": the FHR2 trace is 20bpm higher than it really is.

7.5 Monitoring Uterine Activity Externally

7.5.1 Parts Required

1) TOCO transducer 2) Belt

7.5.2 TOCO Monitoring Procedure

1) Placing Transducer Belt

Place the transducer belt across the bed.

Lie the patient on the bed with her abdomen crossing the belts.

2) Fixing the Transducer

Set the TOCO baseline.

Place the transducer on the patient's fundus to get optimum recording of uterine activity. Refer to figure 7-1 for the TOCO transducer position.

Wrap the abdomen with the belt over the transducer. Fix the transducer by pushing its buckle through the overlapping section of the belt. Make sure the belt is neither too tight nor too loose and the patient is monitored comfortably.

3) Adjust the Value to Zero

Press the **AUTO ZERO** key to adjust the value to the baseline. Make sure this is not done during a contraction.

The uterine activity reading at this point should be 30 ~ 90. A flat-top at lower than 100 units on the TOCO scale indicates the belt is too tight, you need to adjust it.

Wipe off any gel presents on abdomen around this area.

NOTES:

1) Do not apply aquasonic coupling gel on a TOCO transducer or its contact area.

2) Check the function of the TOCO transducer by applying pressure on it to see if this is displayed on the screen.

7.5.3 To Change the UA Baseline

1 Select setup key  in the main interface.
2 Select **Fetus** ⇨ **UA Baseline**.
3 Select **5**, **10** (default), **15** or **20**.
4 Select **OK**.

NOTE: If your monitor has configured with IUP, the baseline will be 10 and not adjustable.

7.6 Monitoring Uterine Activity Internally (F6-Optional)

7.6.1 Parts Required

1) Disposable intrauterine pressure catheter ACCU-TRACE™ IUPC ("IUPC" for short)
2) Reusable intrauterine pressure connecting cable ("connecting cable" for short)
3) Reusable intrauterine pressure cable ("IUP cable" for short)

7.6.2 Directions for Use of IUPC

Preparation

1) Gather supplies: ACCU-TRACE IUPC, reusable cable, and amnioinfusion supplies if needed.
2) Open the sterile ACCU-TRACE IUPC package.

Insertion

NOTE: This product is designed for use with the introducer.

3) Using aseptic technique, remove the catheter from the package.
4) Perform vaginal exam to insure ruptured membranes and adequate dilation.
5) Advance the catheter tip to the cervical os along the examination hand, using the hand as a guide. Do not advance the introducer through the cervix.
6) Continue to gently advance the catheter tip through the cervical os and feed the catheter into the intra-amniotic cavity until the 45cm mark is at the introitus. If the 45cm mark is not clearly visible, stop advancing when the ● symbol on the catheter meets the introducer.

   NOTE: For easier insertion, do not twist the catheter in the introducer.

7) The IUPC may spontaneously fill with amniotic fluid. This can be seen in the clear lumen of the catheter. The filter cap will prevent the amniotic fluid from leaking.

8) Slide the introducer out of the vagina along the catheter. When the introducer is completely out of the vagina, slide thumb between catheter and introducer tab, which will begin to separate the introducer from the catheter. (See figure 7-3)

Figure 7-3 Separate the introducer

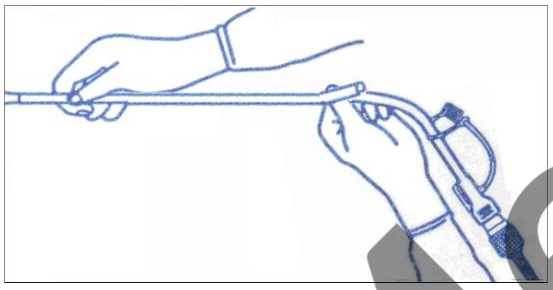

9) Anchoring the catheter in place with one hand, pull the introducer straight back off the catheter. (See figure 7-4)

Figure 7-4 Remove the introducer

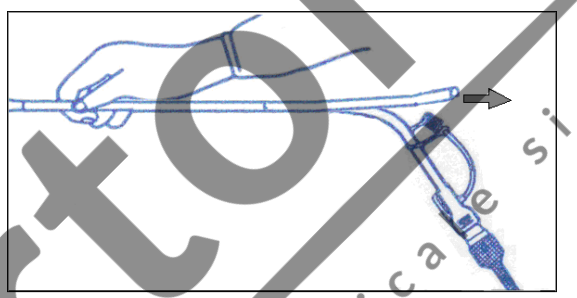

10) Remove the liner from the adhesive pad, then adhere the pad to the patient's skin. Secure the catheter by placing the catheter attachment strap to the adhesive pad. (See Figure 7-5).

Figure 7-5 Secure the adhesive pad to mother

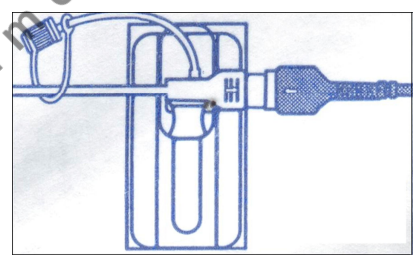

Rezeroing the System During Monitoring

1) With the catheter connected to the IUP cable, momentarily pressing the re-zero button on the pressure cable (See Figure 7-6). The green light on the cable will flash for five seconds.

Figure 7-6 Rezeroing the system

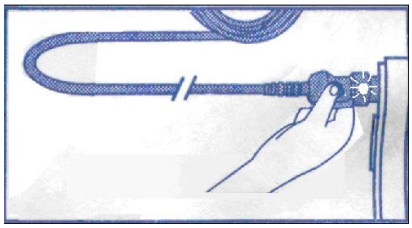

2) During this time, adjust the monitor to zero by pressing **AUTO ZERO** key.

⚠WARNING⚠:

- **Before insertion, placental position should be confirmed, amniotic membranes adequately ruptured and sufficient cervical dilatation assured.**
- **Try to insert the catheter opposite the placental site. Do not insert the introducer beyond the cervical OS. Use with caution when uterine infection is present.**
- **If resistance is met at any time during insertion, withdraw the catheter slightly and try at a different angle. Forced insertion may result in patient's discomfort or injury.**

◈CAUTION◈:

- **Since procedures vary according to hospital needs/ preferences, it is the responsibility of the hospital staff to determine exact policies and procedures for both monitoring and amnioinfusion. The safe and effective use of the IUPC depends on the skill of the clinician who applies /uses it.**
- **Read *Directions For Use of IUPC* prior to insertion. The Product has been sterilized by gamma radiation and is sterilized and non-pyrogenic unless package is broken or open. Do not re-sterilize it.**

NOTE:

Refer to the instruction on the package for more information about using the IUPC.

7.6.3 IUP Monitoring Procedure

1) Insert IUPC using the procedure described in section 7.6.2.
2) Connect the IUPC to the IUP cable. (See figure 7-7)

Figure 7-7 Connect catheter to pressure cable

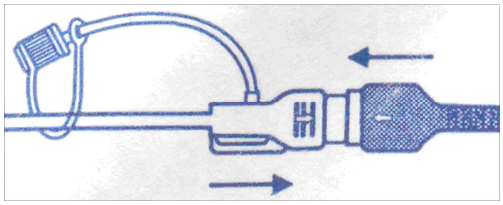

3) Connect the IUP cable to the connecting cable. (They might have already been well connected in the package.)
4) Plug the connecting cable to the TOCO/IUP socket of the monitor.
5) Momentarily pressing the re-zero button on the IUP cable. The green light on the cable will flash for five seconds. During this time, zero the monitor by pressing the **AUTO ZERO** key. Make sure the display value and trace are both “0”.
6) Ask the mother to cough. A spike on the trace in response to the cough indicates proper positioning and function of the IUPC.
7) Wash timely during monitoring. A spike on the tracing will respond to the washing.

7.6.4 Checking Intrauterine Pressure Cable Function

To test an IUP cable’s function:

1) Disconnect the catheter from the cable. Insert the cable check plug into the catheter end of the cable. (See Figure 7-8).

Figure 7-8 Test the Pressure Cable

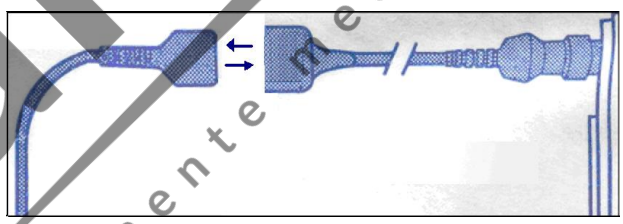

2) Verify that the green light is continuously lit (no flashing).
3) If the light does not illuminate, replace the cable.

NOTE: If the light is flashing, verify that the cable check plug is inserted completely into the cable.

⚠WARNING⚠:

The cable test function is not meant to check the accuracy of the system, only to confirm cable function.

7.7 Monitoring Fetal Movement

7.7.1 Auto Fetal Movement (AFM) Monitoring

Auto fetal movement is also detected from the ultrasound Doppler signal. The fetal movement signals differ from the Doppler heart rate signal in that they have larger extent and lower frequency. The larger extent is because of the bigger scope of moving areas (e.g., the fetal arms or legs); lower frequency is because of the lower velocity of the fetal movements compared with those of the fetal heart.

Only US1 channel can monitor AFM. But be aware that when monitoring twins, the AFM detected by US1 may also caused by the second fetus's movement.

The movement of the fetus will be detected and displayed in the form of a trace on the screen and the record paper.

AFM monitoring can be switched off; its gain is adjustable.

7.7.2 To Enable or Disable AFM Trace

The AFM trace on the screen can be enabled or disabled.

1 Select setup key  in the main interface.
2 Select **Fetus** ⟹ **AFM**.
3 Select **On** or **Off** (default).
4 Select **OK**.

7.7.3 To Change AFM Gain

The AFM gain affects overall value and scope of the AFM trace.

1 Select setup key  in the main interface.
2 Select **Fetus** ⟹ **AFM Gain**.
3 Select **1**, **2**, **3** (default) or **4**.
4 Select **OK**.

7.7.4 Manual Fetal Movement (MFM) Monitoring

MFM monitoring result comes from the patient's feeling of fetal movement. The count will be displayed on the screen in MFM numeric area.

1) Insert the FM marker connector into **MARK** socket on the monitor.

2) Let the patient hold the marker in hand; ask her to press the top key of it when a fetal movement is felt. Continuous movements in 5 seconds are considered to be one movement and only press the key once.

7.8 Start Monitoring

Press the **START** key, the monitor will automatically zero the pressure, clear the MFM count and start monitoring.

If the Auto-print is Off, press **PRINT** to start printing.

7.9 Login

7.9.1 Auto Login

After you press the **START** key, the system creates an auto-ID consisting of date and time, whose format is YYMMDDHHMM.

7.9.2 To Change an ID

You can change the ID after monitoring starts:

1 Select login key  in the main interface to open the login menu.
2 Select **ID**.
3 Select the required number for patient's ID on the soft keyboard.
4 Select **ok**.
5 Select **Name**.
6 Select the required letter for patient's name on the soft keyboard.
7 Select **ok**.
8 Select **OK**.

Figure 7-9 Login Menu Figure

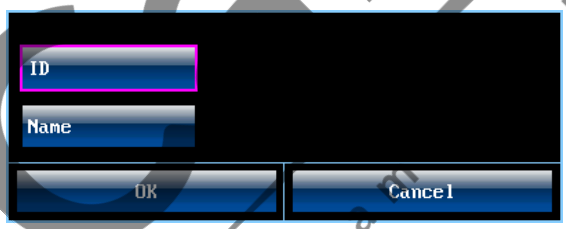

7-10 Soft Keyboard

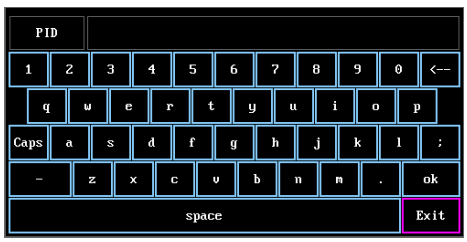

The monitoring does not stop when changing the ID. After you select **OK** to exit the menu, the new ID takes the place of the old one for this patient.

CAUTION:

1. **Pressing START key separates two patients. The monitor only displays the most recent ID for the same patient.**
2. **If printing starts automatically with the monitoring, the first ID printed on the record paper will be the auto-ID. The new ID will be printed 10 minutes later.**

7.9.3 Manual Login

If the manual login is enabled, the login menu will pop up for you to input ID and name for the patient after the **START** key is pressed. The monitoring starts immediately after exiting from the menu.

To enable/disable manual login:

1 Select setup key  in the main interface.
2 Select **Start Monitor** ⟹ **Login**.
3 Select **On** or **Off** (default).
4 Select **OK**.

7.10 Fetal Monitoring Screen Display

Figure 7-11 Fetal monitoring screen display

7.10.1 Fetal Monitoring Traces

Figure 7-12 Fetal monitoring traces

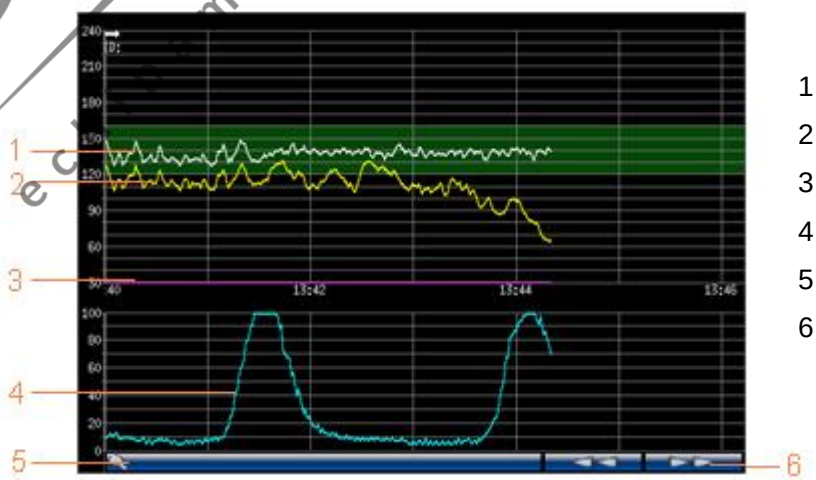

1 FHR1 Trace
2 FHR2 Trace
3 AFM Trace
4 TOCO Trace
5 Searching Key
6 Reviewing Key

When monitoring or reviewing, the trace window displays four traces at most (refer to Figure 7-12): FHR1 trace, FHR2 trace (dual configuration), AFM trace and TOCO trace.

FHR1/FHR2 trace

The y-axis of the trace indicates the values of FHR, whose range is 30 ~ 240 bpm (American standard) or 50 ~ 210 bmp (International standard).

AFM trace

The y-axis indicates the scope of fetal movement.

NOTE: The AFM trace is only for reference, please take the MFM marks as criterion.

TOCO trace

The y-axis indicates the value of TOCO, whose range is 0% ~ 100%.

Besides, some other symbols appear among the traces:

➡ This symbol indicates a new monitoring starts.

⬆ This symbol indicates a manual fetal movement from the patient pressing the FM marker.

⬇ This symbol indicates the **MARK** key is pressed to record an event, such as the patient turning around, taking injection.

⨯ This symbol indicates the monitor is zeroed by pressing **AUTO ZERO** key.

7.10.2 Changing the Format of X-Axis

The fetal monitoring traces share the same x-axis, which displays the time every two minutes. This time is either in real time format or relative time format. Real time is the time of the monitor; relative time records the duration from when the monitor is switched on to the present time.

To change this time format:

1 Select setup key  in the main interface.
2 Select **Date And Time** ⇨ **Horizontal Axis Format**.
3 Select **Real Time** (default) or **Relative Time**.
4 Select **OK**.

7.10.3 Reviewing

The reviewing keys  under the traces are used to review the traces saved in the monitor.

Select  to review the previous traces, “X%<<” appears on top of the traces. Select it again to pause.

Select  to review the following traces, “X%>>” appears on top of the traces. Select it again to pause.

X% indicates the proportion of current traces positioned in the whole reviewable traces.

Move the cursor to any other place other than the reviewing keys or searching key, or press any place of the screen other than the fetal traces window, the monitor will return to real time main interface.

When reviewing, the monitor does not stop. The FH sound and values are all real time information of the current patient.

7.10.4 Searching for a Patient

The searching key  under the traces is used to search for a patient’s data saved in the monitor.

Select this key to open the patient information list. It contains six sets of most recent patient’s ID and name. Select the required item, the main interface will switch to the most current data of this patient. If the patient is not in this list, select **MORE** and input ID or name to search for the record.

7.10.5 Changing the Screen Scroll Mode

The screen scrolls with time when the monitor receives valid data. When no valid data is received, the screen will scroll either with time (auto) or valid FHR data. Auto means the screen keeps scrolling when time passing by; Valid means the screen stops scrolling after no valid data has received for 60 seconds. It will start scrolling again when valid data is received.

To change the screen scroll mode:

1 Select setup key  in the main interface.
2 Select **Fetus** ⟹ **Scroll Trace**.
3 Select **Auto** (default) or **Valid**.
4 Select **OK**.

7.10.6 Fetal Monitoring Values

The fetal monitoring values in the numeric window include FHR1 value, FHR2 value, TOCO value and MFM count:

FHR1 	: FH refreshing rate
	: FH sound volume adjusting key
	: FH sound volume indicator
	137: FHR1 value. If the US1 socket is not connected with a US transducer, nothing displays here; if the transducer is connected but no monitoring is going on, it displays ---.
FHR2 	136: FHR2 value. If the US2/DECG socket is not connected with a US transducer/DECG cable when switching on, it displays OFF but no value here; if the transducer/cable is connected but no monitoring is going on, it displays ---.
TOCO 	(10): UA baseline
	11: current UA value
MFM Count 	1: MFM count

7.10.7 Fetal Monitoring Alarm Messages

This table lists the alarm information that might appear during fetal monitoring, their respective causes and countermeasures.

Alarm Message	**Cause**	**Countermeasure**
Patient Alarm		
**FHR1 HIGH or ** FHR1 xxx > yyy, **FHR2 HIGH or ** FHR2 xxx > yyy	FHR1 or FHR2 measuring result (xxx) is higher than the set upper limit (yyy) over the alarm delay time.	Check if the alarm limits are suitable; check the woman's condition.

**FHR1 LOW or ** FHR1 xxx < yyy, **FHR2 LOW or ** FHR2 xxx < yyy	FHR1 or FHR2 measuring result (xxx) is lower than the set lower limit (yyy) over the alarm delay time.	Check if the alarm limits are suitable; check the woman's condition.
Technical Alarm		
US1 UNPLUGGED or US2 UNPLUGGED	Ultrasound transducer 1 or US transducer 2 is not well connected.	Check the connection of the transducer.
US1 SIGNAL LOSS or US2 SIGNAL LOSS	FHR1 or FHR2 signal is too weak for the system to analyze.	Check if the US transducer is aiming at the fetal heart; check if the alarm limits are suitable; check the woman's condition.
TOCO UNPLUGGED	TOCO transducer is not well connected.	Check the connection of the transducer.
Fetus EQUIP MALF	The fetus board can not communicate with the system successfully.	Restart the monitor and try again, contact EDAN if the connection still fails.
Battery Low	The battery power is too low to support further work of the monitor.	Connect the monitor to AC power supply.
Check Paper	There is no paper in the paper drawer or the drawer is open.	Load paper and/ or close the drawer.
Signals Overlap	US transducer 1 and US transducer 2 are aiming at the same fetal heart; the two channels are crossed.	Adjust one of the US transducers until another fetal heart signal is detected.
DECG LEADS OFF	The spiral electrode is not well connected.	Check the connection of the spiral electrode.
DECG UNPLUGGED	The DECG lead is not well connected to the monitor.	Check the connection of the DECG cable.
DECG SIGNAL LOSS	DECG signal is too weak for the system to analyze.	Check if the spiral electrode is well attached to the fetus; check the woman's condition.

Chapter 8 Maternal Monitoring (F6 Express)

⚠WARNING⚠:

- **The monitor is not protected against defibrillation. Do not apply it during electro-surgery or MRI, otherwise it might result in harming the patient or the operator.**
- **Always check if the alarm settings are appropriate for your patient before starting a monitoring.**

8.1 Maternal ECG Monitoring

8.1.1 Introduction

ECG monitoring produces a continuous wave form of the patient's cardiac electric activity to enable an accurate assessment of current physiological state. Only proper connection of ECG cables can ensure a satisfactory measurement.

The parts needed are ECG lead and electrodes.

⚠WARNING⚠: When connecting the cables and electrodes, make sure no conductive part is in contact with the ground. Verify that all ECG electrodes, including neutral electrodes, are securely attached to the patient.

◈CAUTION◈: Only use the ECG leads supplied by EDAN when using F6 Express monitor for ECG monitoring.

NOTE: Interference from a non-grounded instrument near the patient and ESU interference can cause inaccuracy of the waveform.

A good ECG signal should be -

- With normal QRS wave.
- Tall and narrow with no notches.
- With tall R-wave completely above or below the baseline.
- With pacer spike no higher than R-wave height.
- With T-wave less than one-third of the R-wave height.
- With P-wave much smaller than the T-wave.

Figure 8-1 Standard ECG waveform

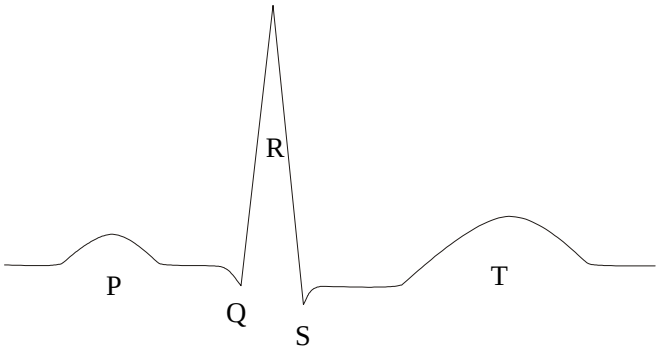

8.1.2 How to Place 3-lead ECG Cable

The table below lists the names and position of 3-lead ECG cable in America and Europe.

America		Europe		Position
Name	**Color**	**Name**	**Color**	
RA	White	R	Red	Near the right shoulder, right below the clavicle
LA	Black	L	Yellow	Near the left shoulder, right below the clavicle
LL	Red	F	Green	On the left hypogastrium

Figure 8-2 Placing 3-lead ECG cable

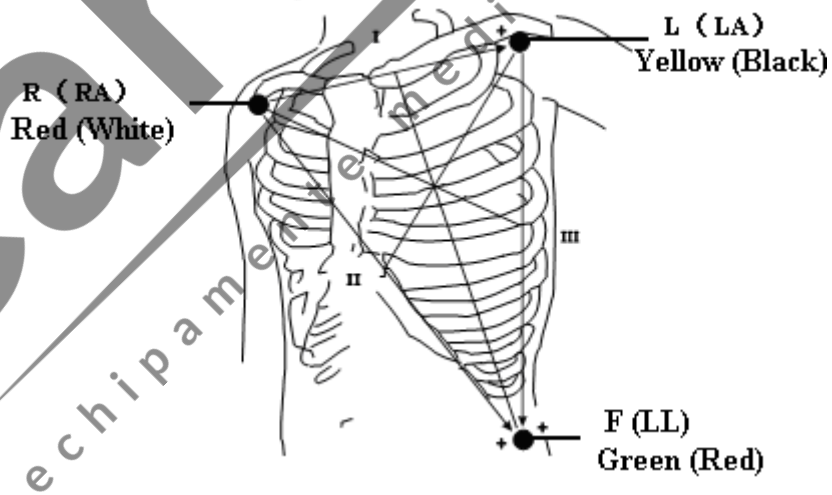

NOTES:

1) **To ensure patient's safety, all leads must be attached to the patient.**
2) **Check everyday if the skin is irritated from attachment of electrodes, if so, change for new electrodes or their sites every 24 hours.**
3) **Recycle or dispose the used electrodes properly to protect the environment.**

8.1.3 ECG Monitoring Procedure

1) Prepare the skin for ECG monitoring. Refer to section 7.3.3 *Prepare the Patient's Skin Prior to Placing Electrodes*.

2) Insert the ECG cable connector into the MECG socket on the monitor.

3) Connect attachment pad electrodes with ECG cable.

4) Peel the protection membrane off the back of attachment pad electrodes and attach electrodes to the patient. Refer to section 8.1.2 for electrodes' sites.

NOTE: After the monitor is on, if electrodes are not well attached or fell off, alarm message "ECG LEADS OFF" will appear on the screen to draw your attention.

8.1.4 To Change ECG Source

Refer to figure 8-2, the ECG signal can come from channel I, II or III. In the ECG trace area of the main interface, **ECG (II, X1)** indicates the ECG source and gain.

If the electrodes are tightly attached to the patient but ECG waveform is not accurate, try to switch ECG source to another lead.

1 Select setup key  in the main interface.
2 Select **Mother** ⇨ **Lead**.
3 Select **I**, **II** (default) or **III**.
4 Select **OK**.

8.1.5 To Change ECG Gain

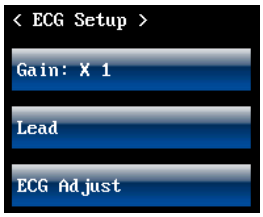

The ECG gain affects overall value and scope of the ECG waveform.

1 Select setup key  in the main interface.
2 Select **Mother** ⇨ **Gain**.
3 Select **Auto**, **X1/4**, **X1/2**, **X1** (default) or **X2**.
'Auto' means the monitor adjusts the gain automatically. The system displays a 1mv scale at the left side of the ECG waveform. The height of 1mv bar is directly proportional to the waveform amplitude.
4 Select **OK**.

8.1.6 To Enable ECG Adjusting

1 Select setup key  in the main interface.
2 Select **Mother** ⇨ **ECG Adjust**.
3 Select **Adjust** or **Off** (default).
4 Select **OK**.

8.2 Maternal SpO_2 Monitoring

8.2.1 Introduction

SpO_2 Plethysmogram measurement is employed to determine the oxygen saturation of hemoglobin in the arterial blood. If, for example, 97% hemoglobin molecules in the red blood cells of the arterial blood combine with oxygen, then the blood has a SpO_2 oxygen saturation of 97%. The SpO_2 numeric on the monitor will read 97% .The SpO_2 numeric shows the percentage of hemoglobin molecules which have combined with oxygen molecules to form oxyhemoglobin. The SpO_2/PLETH parameter can also provide a pulse rate signal and a plethysmogram wave.

⚠WARNING⚠:

- **Do not put the SpO_2 sensor on the extremities with arterial catheter or venous syringe.**
- **Do not perform SpO_2 measuring and NIBP measuring in the same arm at one time, because obstruction of blood flow during NIBP measuring may adversely affect the reading of SpO_2 value.**
- **Prolonged and continuous monitoring may increase jeopardy of unexpected change of dermal condition such as abnormal sensitivity, rubescence, vesicle, repressive putrescence, and so on. It is especially important to check the sensor placement of neonate and patient of poor perfusion or immature dermogram by light collimation and proper attaching strictly according to changes of the skin.**
- **The maximum application time of the SpO_2 sensor at a single site is 4 hours. Check per 2 ~ 3 hours the sensor placement and move it when the skin deteriorates. More frequent examinations may be required for different patients.**
- **Setting the SpO_2 higher alarm limit to 100% is equivalent to switching off the alarm on higher limit. High oxygen levels may predispose a premature infant to retrolental fibroplasia. Therefore, the higher alarm limit for oxygen saturation must be carefully selected in accordance with commonly accepted clinical practices.**

Measurement Limits -

In operation, the accuracy of oximetry readings can be affected by:

- High-frequency electrical noise, including noise created by the host system, or noise from external sources, such as electrosurgical apparatus, which is admitted by the host system.
- Magnetic resonance imaging (MRI) scanning. Induced current could potentially cause burns.
- Intravascular dye injections
- Excessive patient movement

- Improper sensor application
- Sensor temperature (maintain the temperature between 28 °C (82.4 °F) and 42 °C (107.6 °F) for best operation)
- Placement of the sensor on an extremity that has a NIBP cuff, arterial catheter, or intravascular line.
- Significant concentrations of dysfunctional hemoglobin, such as carboxyhemoglobin and methemoglobin.
- External illumination more than 5,000 lumens/square meter (typical office lighting)
- Venous pulsations.
- Using of a SpO_2 Transducers not approved by EDAN.

8.2.2 SpO_2 Monitoring Procedure

1) Insert the SpO_2 Transducer Plug into the SpO_2 socket on the monitor.

2) Place the forefinger, middle finger or third finger into the SpO_2 sensor, refer to figure 8-3.

Figure 8-3 Placement of finger for SpO_2 measuring

NOTES:

1) **The nail should cover the light but not too long.**
2) **The cable should be placed on the backside of the hand.**
3) **Out body light sources such as radiated rays or ultrared rays should be avoid.**

8.2.3 To View SpO_2 Alarm Settings

Always check if the alarm settings are appropriate for your patient before starting a monitoring. To view the present SpO_2 alarm setting,

1 Select setup key  in the main interface.

2 Select **ECG & SpO_2**.

In the ECG & SpO_2 alarm setup menu, it shows:

On/Off: The SpO_2 alarm is switched on or off.

90 – 100 %: The preset SpO_2 alarm lower limit and higher limit.

0 second: The SpO_2 alarm delay. It's not adjustable.

8.2.4 To Switch the SpO_2 Alarm On or Off

1 Select setup key  in the main interface.
2 Select **ECG & SpO_2** ⟹ **SpO_2** ⟹ **Alarm**.
3 Select **On** (default) or **OFF**.
4 Select **OK**.

8.2.5 To Change SpO_2 Alarm Limits

1 Select setup key  in the main interface.
2 Select **ECG & SpO_2** ⟹ **SpO_2**.
3 Select **Lower Limit** from 50 ~ 99%; the step is 1 and the default is 90%.
4 Select **Upper Limit** from 51 ~ 100%; the step is 1 and the default is 100%.
5 Select **OK**.

8.3 Maternal HR Monitoring

8.3.1 Introduction

Maternal heart rate (HR) monitoring does not need an extra accessory. When you perform ECG or SpO_2 (Pulse) monitoring, the HR result can be acquired at the same time.

8.3.2 To Choose HR Source

The HR source setup should comply with the monitoring that is being performed; otherwise the HR result will not be acquired.

1 Select setup key  in the main interface.
2 Select **Mother** ⟹ **HR Source**.
3 Select **ECG** (default) or **Pulse**.
4 Select **OK**.

8.3.3 To View HR Alarm Settings

Always check if the alarm settings are appropriate for your patient before starting a monitoring. To view the present HR alarm setting,

1 Select setup key  in the main interface.
2 Select **ECG & SpO_2**.

In the ECG & SpO_2 alarm setup menu, it shows:

On/Off: The HR alarm is switched on or off.

50 – 120 bpm: The preset HR alarm lower limit and higher limit.

0 second: The HR alarm delay. It's not adjustable.

8.3.4 To Switch the HR Alarm On or Off

1 Select setup key  in the main interface.
2 Select **ECG & SpO_2** ⇨ **HR** ⇨ **Alarm**.
3 Select **On** (default) or **OFF**.
4 Select **OK**.

8.3.5 To Change HR Alarm Limits

1 Select setup key  in the main interface.
2 Select **ECG & SpO_2** ⇨ **HR**.
3 Select **Lower Limit** from 30 ~ 239 bpm; the step is 1 and the default is 50 bpm.
4 Select **Upper Limit** from 31 ~ 240 bpm; the step is 1 and the default is 120 bpm.
5 Select **OK**.

8.4 Maternal NIBP Monitoring

8.4.1 Introduction

The monitor measures blood pressure using the oscillometric method.

There are two modes available: Manual and Auto. Manual measures NIBP once on each demand. Auto measures NIBP repeatedly after a preset time interval. This interval is adjustable.

You can perform a manual measurement during an Auto measurement interval.

Each mode measures and displays diastolic pressure (DIA), systolic pressure (SYS) and mean artery pressure (MAP).

⚠WARNING⚠: Check for any faulty of the cuff before start monitoring.

⚠WARNING⚠: Do not perform NIBP measurements on patients with sickle-cell disease or under any condition which the skin is damaged or expected to be damaged.

⚠WARNING⚠: For a thrombasthemia patient, it is important to determine whether measurement of the blood pressure shall be done automatically. The determination should base on clinical evaluation.

Measurement Limitations -

To different patient conditions, the oscillometric measurement has certain limitations. The measurement is in search of regular arterial pressure pulse. In those circumstances when the patient's condition makes it difficult to detect, the measurement becomes unreliable and measuring time increases. You should be aware that the following conditions could interfere with the measurement, making the measurement unreliable or longer to derive. In some cases, the patient's condition will make a measurement impossible.

- **Patient Movement**

Measurements will be unreliable or may not be possible if the patient is moving, shivering or having convulsions. These motions may interfere with the detection of the arterial pressure pulses. In addition, the measurement time will be prolonged.

- **Cardiac Arrhythmia's**

Measurements will be unreliable and may not be possible if the patient's cardiac arrhythmia has caused an irregular heartbeat. The measuring time thus will be prolonged.

- **Heart-lung Machine**

Measurements will not be possible if the patient is connected to a heart-lung machine.

- **Pressure Changes**

Measurements will be unreliable and may not be possible if the patient's blood pressure is changing rapidly over the period of time during which the arterial pressure pulses are being analyzed to obtain the measurement.

- **Severe Shock**

If the patient is in severe shock or hypothermia, measurements will be unreliable since reduced blood flow to the peripheries will cause reduced pulsation of the arteries.

- **Heart Rate Extremes**

Measurements can not be done to a patient whose heart rate is lower than 40 bpm or higher than 240 bpm.

8.4.2 How to Apply NIBP Cuff

1) Select appropriate cuff for the patient.

The width of the cuff should be either 40% of the limb perimeter or 2/3 of the upper arm length. The inflatable part should be long enough to encircle 50%~80% of the limb.

The table below lists the reference size:

Type	Limb Perimeter	Cuff Size	Air Hose Length
Upper Arm (Adult 1)	25 ~ 35 cm	14 cm	1.5 m or 3 m
Upper Arm (Adult 2)	33 ~ 47 cm	17 cm	
Thigh (Adult)	46 ~ 66 cm	21 cm	

2) Squeeze the cuff to discharge the air.

3) Apply the cuff to the patient; make sure that the symbol "Φ" is over the appropriate artery (Refer to figure 8-4). Ensure that the cuff is not wrapped too tightly around the limb. Excessive tightness may cause discoloration and eventual ischemia of the extremities.

Figure 8-4 Applying the cuff

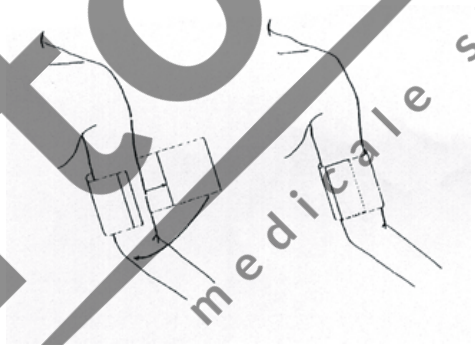

8.4.3 Preparation for NIBP Monitoring

1) Insert the cuff plug into NIBP socket on the monitor.

2) Apply the NIBP cuff to the patient's arm or leg with the instructions described in section 8.4.2.

3) Connect the cuff to the air hose. The limb chosen for taking the measurement should be placed at the same level as the patient's heart. If this is not possible, correct the measurement using the formula described in section 8.4.6.

8.4.4 Auto Measurement

To perform an Auto measurement,

1 Select setup key  in the main interface.

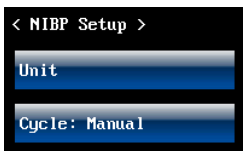

2 Select **Mother** ⇨ **Cycle**.

3 Select a time interval from 1, 2, 3, 4, 5, 10, 15, 30, 60, 90, 120, 180, 240 and 480 minutes.

4 Select **OK**.

5 Press **NIBP** key on the front panel of monitor to start Auto measurement.

NOTE: After the NIBP key is pressed, the system checks uterine pressure. If the uterine pressure is higher than 50, it will automatically delay the NIBP measuring for 20 seconds.

To stop the current measurement,

Press the **NIBP** key anytime during the current measurement to stop it. Another measurement will start after the time interval.

⚠WARNING⚠: Prolonged NIBP measurements in automatic mode may be associated with purport, ischemia and neuropathy in the limb wearing the cuff. When monitoring a patient, examine the extremities of the limb frequently for normal color, warmth and sensitivity. If any abnormality is observed, stop the NIBP measurements.

8.4.5 Manual Measurement

To perform a Manual measurement,

1 Select setup key  in the main interface.

2 Select **Mother** ⇨ **Cycle**.

3 Select **Manual**.

4 Select **OK**.

5 Press **NIBP** key on the front panel of monitor to start a Manual measurement.

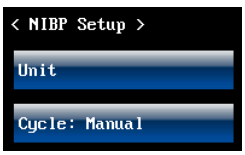

To stop the Manual measurement,

Press the **NIBP** key anytime during the measurement to stop it.

To perform a Manual measurement during an Auto measurement interval,

Press the **NIBP** key to start the manual measurement. Press **NIBP** key again anytime to stop it.

The monitor will restart timing for the Auto measurement and resume measuring after the time interval.

NOTE: If you are in doubt about the accuracy of any reading(s), check the patient's vital signs by an alternative method before checking the functioning of the monitor.

CAUTION: If liquid is inadvertently splashed on the equipment or its accessories, or may enter the conduit or inside the monitor, contact local service center.

8.4.6 To Correct the Measurement

To correct the measurement if the limb is not at heart level,

- add 0.75 mmHg (0.10 kPa) for each inch higher.
- deduct 0.75 mmHg (0.10 kPa) for each inch lower.

8.4.7 To Change NIBP Unit

To change NIBP unit,

1 Select setup key  in the main interface.
2 Select **Mother** ⟹ **Unit** (NIBP Setup).
3 Select **mmHg** (default) or **kPa**.
4 Select **OK**.

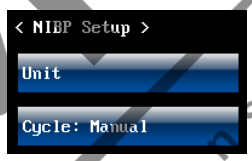

8.4.8 To View NIBP Alarm Settings

Always check if the alarm settings are appropriate for your patient before starting a monitoring. To view the present NIBP alarm setting,

1 Select setup key  in the main interface.
2 Select **NIBP & TEMP**.

In the NIBP alarm setup menu, it shows:

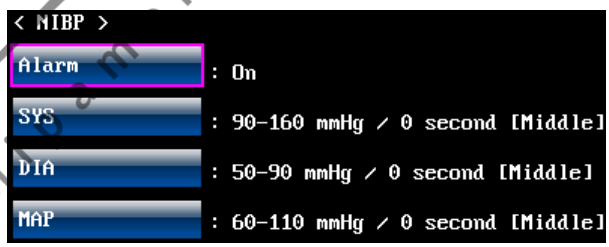

On/Off: The NIBP alarm is switched on or off.

SYS: 90 – 160 mmHg: The preset SYS alarm lower limit and higher limit.

DIA: 50 – 90 mmHg: The preset DIA alarm lower limit and higher limit.

MAP: 60 – 110 mmHg: The preset MAP alarm lower limit and higher limit.

0 second: The NIBP alarm delay. It's not adjustable.

8.4.9 To Switch the NIBP Alarm On or Off

1 Select setup key in the main interface.
2 Select **NIBP & TEMP** ⇨ **Alarm**.
3 Select **On** (default) or **OFF**.
4 Select **OK**.

8.4.10 To Change SYS Alarm Limits

1 Select setup key in the main interface.
2 Select **NIBP & TEMP** ⇨ **SYS**.
3 Select **Lower Limit** from 30 ~ 269 mmHg; the step is 1 and the default is 90 mmHg.
4 Select **Upper Limit** from 31 ~ 270 mmHg; the step is 1 and the default is 160 mmHg.
5 Select **OK**.

8.4.11 To Change DIA Alarm Limits

1 Select setup key in the main interface.
2 Select **NIBP & TEMP** ⇨ **DIA**.
3 Select **Lower Limit** from 10 ~ 244 mmHg; the step is 1 and the default is 50 mmHg.
4 Select **Upper Limit** from 11 ~ 245 mmHg; the step is 1 and the default is 90 mmHg.
5 Select **OK**.

8.4.12 To Change MAP Alarm Limits

1 Select setup key in the main interface.
2 Select **NIBP & TEMP** ⇨ **MAP**.
3 Select **Lower Limit** from 20 ~ 254 mmHg; the step is 1 and the default is 60 mmHg.
4 Select **Upper Limit** from 21 ~ 255 mmHg; the step is 1 and the default is 110 mmHg.
5 Select **OK**.

8.5 Maternal TEMP Monitoring

8.5.1 TEMP Monitoring Procedure

1) Insert the TEMP plug into the TEMP socket on the monitor.

2) Apply the sensor firmly underneath the patient's oxter.

⚠WARNING⚠: Check for any faulty of the transducer before start monitoring.

CAUTION: Be cautious when taking and putting the TEMP transducer. Do not pull the cable too tight or it might cause mechanical damage.

8.5.2 To Change TEMP Unit

To change TEMP unit,

1 Select setup key in the main interface.
2 Select **Mother** ⇨ **Unit** (TEMP Setup).
3 Select **ºC** (default) or **ºF**.
4 Select **OK**.

8.5.3 To View TEMP Alarm Settings

Always check if the alarm settings are appropriate for your patient before starting a monitoring. To view the present TEMP alarm setting,

1 Select setup key in the main interface.
2 Select **NIBP & TEMP**.

In the TEMP alarm setup menu, it shows:

On/Off: The TEMP alarm is switched on or off.

36.0 – 39.0 ºC: The preset TEMP alarm lower limit and higher limit.

0 second: The TEMP alarm delay. It's not adjustable.

8.5.4 To Switch the TEMP Alarm On or Off

1 Select setup key in the main interface.
2 Select **NIBP & TEMP** ⇨ **TEMP** ⇨ **Alarm**.
3 Select **On** (default) or **OFF**.
4 Select **OK**.

8.5.5 To Change TEMP Alarm Limits

1 Select setup key in the main interface.
2 Select **NIBP & TEMP** ⇨ **TEMP**.
3 Select **Lower Limit** from 0.0 ºC ~ 49.9 ºC; the step is 0.1 and the default is 36.0 ºC.
4 Select **Upper Limit** from 0.1 ºC ~ 50.0 ºC; the step is 0.1 and the default is 39.0 ºC.
5 Select **OK**.

8.6 Maternal Monitoring Display

Figure 8-5 Maternal-fetal Display

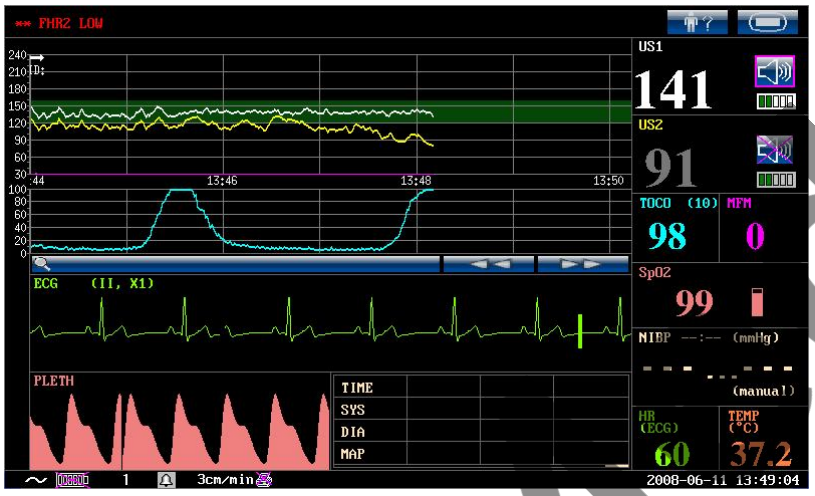

8.6.1 To Change the Display Mode

F6 Express has three display modes for option: maternal-fetal display (figure 8-5), fetal display (figure 8-6) and maternal display (figure 8-7).

To change the display mode,

1 Select setup key  in the main interface.

2 Select **Mother** ⇨ **APM GUI Switch**.

3 Select this key once, the display mode will switch to the next mode (maternal-fetal display, fetal display or maternal display). Select this key again, the display mode will switch to the third one.

4 Select **OK**.

Figure 8-6 Fetal Display

Figure 8-7 Maternal Display

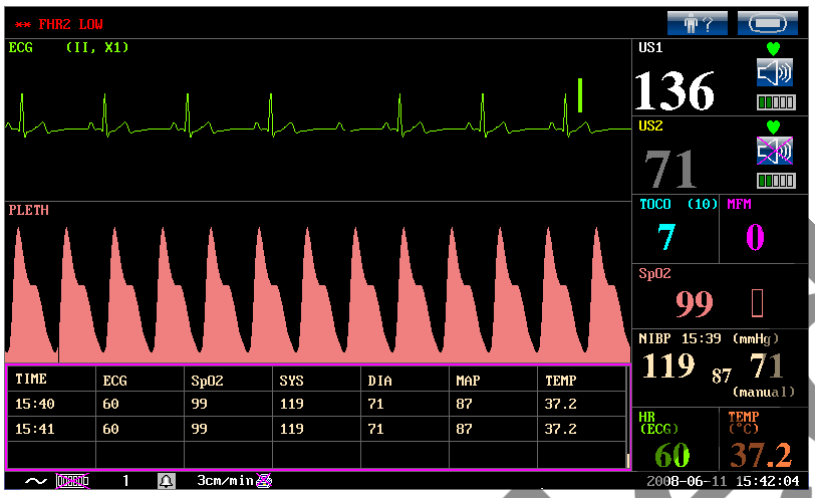

8.6.2 Maternal Monitoring Traces

Figure 8-8 Maternal Monitoring Traces

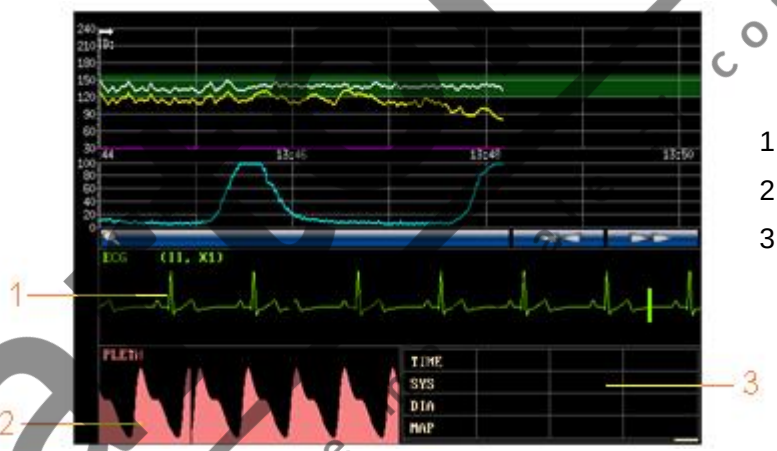

1 ECG trace

2 SpO_2 waveform

3 Numeric List

When monitoring, there are six traces at most displayed in the trace/menu window of maternal-fetal display mode. Other than four fetal monitoring traces, two more maternal traces are added: ECG trace and SpO_2 waveform.

8.6.3 Maternal Numeric List

The maternal numeric list keeps records of most recent NIBP (SYS, DIA and MAP) values and the measurement time.

The numeric list can be reviewed: select the list, rotate the control knob to review the recorded lists.

Specially, in maternal display mode the numeric list can display all maternal parameters. It records Time, ECG, SpO_2, SYS, DIA, MAP and TEMP every one minute. Refer to figure 8-7.

You can change the list type,

1 Select setup key  in the main interface.

2 Select **Mother** ⟹ **APM List Type**.

3 Select **NIBP Parameters** (default) or **ALL Parameters**.

4 Select **OK**.

8.6.3 Maternal Monitoring Values

The maternal monitoring numeric includes FHR1 value, FHR2 value, TOCO value, MFM count, SpO_2 value, NIBP values, HR value and TEMP value:

SpO_2 	99: Current SpO_2 value.
	 : SpO_2 indicator.
NIBP 	15:39: Time when the NIBP measurement starts.
	mmHg: NIBP unit.
	From left to right in turn: current systolic pressure (119), current mean artery pressure (87) and current diastolic pressure (71).
	(manual): The current NIBP measurement mode is manual.
HR 	(ECG): The current HR comes from ECG. 60: Current maternal heart rate value.
TEMP 	ºC: TEMP unit.
	37.2: Current TEMP value.

8.6.4 Maternal Alarm Messages

This table lists the alarm information that might appear during maternal monitoring, and their respective causes, countermeasure:

Alarm Message	Cause	Countermeasure
Patient Alarm		
**HR HIGH or **HR xxx > yyy	MHR result (xxx) is higher than the upper limit (yyy).	Check if the alarm limit is suitable; check the woman's condition.
**HR LOW or **HR xxx < yyy	MHR result (xxx) is lower than the upper limit (yyy).	Check if the alarm limit is suitable; check the woman's condition.

** SpO_2 HIGH or ** SpO_2 xxx > yyy	SpO_2 result (xxx) is higher than the upper limit (yyy).	Check if the alarm limit is suitable; check the woman's condition.
** SpO_2 LOW or ** SpO_2 xxx < yyy	SpO_2 result (xxx) is lower than the upper limit (yyy).	Check if the alarm limit is suitable; check the woman's condition.
**SYS HIGH or **SYS xxx > yyy	SYS result (xxx) is higher than the upper limit (yyy).	Check if the alarm limit is suitable; check the woman's condition.
**SYS LOW or **SYS xxx < yyy	SYS result (xxx) is lower than the upper limit (yyy).	Check if the alarm limit is suitable; check the woman's condition.
**DIA HIGH or **DIA xxx > yyy	DIA result (xxx) is higher than the upper limit (yyy).	Check if the alarm limit is suitable; check the woman's condition.
**DIA LOW or **DIA xxx < yyy	DIA result (xxx) is lower than the upper limit (yyy).	Check if the alarm limit is suitable; check the woman's condition.
**MAP HIGH or **MAP xxx > yyy	MAP result (xxx) is higher than the upper limit (yyy).	Check if the alarm limit is suitable; check the woman's condition.
**MAP LOW or **MAP xxx < yyy	MAP result (xxx) is lower than the upper limit (yyy).	Check if the alarm limit is suitable; check the woman's condition.
**TEMP HIGH or **TEMP xxx > yyy	TEMP result (xxx) is higher than the upper limit (yyy).	Check if the alarm limit is suitable; check the woman's condition.
**TEMP LOW or **TEMP xxx < yyy	TEMP result (xxx) is lower than the upper limit (yyy).	Check if the alarm limit is suitable; check the woman's condition.
Technical Alarm		
ECG LEADS OFF	ECG leads are not well connected.	Check the connection of ECG leads.
SpO_2 SENSOR OFF	SpO_2 sensor is not well connected.	Check the connection of SpO_2 sensor and finger placement.
TEMP UNPLUGGED	TEMP transducer is not well connected.	Check the connection of TEMP transducer.
APM EQUIP MALF	The APM Board can not communicate with the system successfully.	Restart the monitor and try again, contact EDAN if the connection is still failed.
SpO_2 EQUIP MALF	The SpO_2 Board can not communicate with the system successfully.	Restart the monitor and try again, contact EDAN if the connection is still failed.
NIBP EQUIP MALF	The NIBP Board can not communicate with the system successfully.	Restart the monitor and try again, contact EDAN if the connection is still failed.

Chapter 9 After Monitoring

9.1 Data Saving

You can save the data of latest 24 hours in the monitor. The saved data will be loaded in front of the current data when the monitor is switched on again. They are available for reviewing and fast printing.

To save the data:

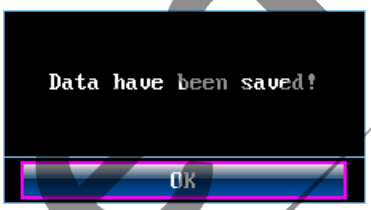

1 Select setup key  in the main interface.
2 Select **Save**.
3 Select **OK**.

9.2 End a Monitoring

After monitoring,

1) Remove transducers or electrodes from the patient; wipe the remaining gel off the patient and the transducer with clean soft cloth or tissue.
2) Tear off the printed record paper along the perforation.

9.3 Switching Off

1) Press and hold the **POWER** switch for at least 3 seconds to switch off the monitor.
2) Unplug the power cord.

⚠WARNING⚠:

Do not press the POWER switch continuously. Allow at least 10 seconds between switching the monitor on and off.

Chapter 10 Maintenance and Cleaning

10.1 Maintenance

10.1.1 Maintaining Inspection

(1) Visual Inspection

Prior to every time use, do the following inspection:

- Check the monitor and accessories to see if there is any visible evidence of damage that may affect patient safety. Pay special attention to the cracks on the transducers and cables before immersing them into conductive fluid.
- Check all the outer cables, power socket and power cables.
- Check if the monitor functions properly to make sure it is in good condition.

If any damage is detected, stop using the monitor on the patient. Replace the damage part(s) or contact EDAN for service before reusing it.

(2) Routine Inspection

The overall check of the monitor, including the safety check and functions check, should be performed by qualified personnel once every 6 to 12 months, and each time after service.

The equipment should undergo periodic safety testing to insure proper patient isolation from leakage currents. This should include leakage current measurement and insulation testing. The recommended testing interval is once a year or as specified in the institution's test and inspection protocol.

(3) Mechanical Inspection

Make sure all exposed screws are tight.

Check the external cables for splits, cracks or signs of twisting.

Replace any cable that shows serious damage.

Pay particular attention to the supply socket.

⚠**WARNING**⚠**: Failure on the part of the responsible individual hospital or institution employing the use of this equipment to implement a satisfactory maintenance schedule may cause undue equipment failure and possible health hazards.**

10.1.2 Maintenance of the Monitor

Keep the exterior surface of the monitor clean, free of dust and dirt.

The gathering of dew in the screen may occur with abrupt temperature or humidity changes. A table environment is recommended.

Scratching and damaging the screen should be avoided.

Avoid high voltage and static charge.

10.1.3 Maintenance of the Transducers

Keep the transducers in a dry environment, where the temperature had better be lower than 45°C.

Gel must be wiped from the US transducer after use. These precautions will prolong the life of the transducer.

Although transducers are designed for durability, they should be handled with care. Rough handling could damage the cover, piezoelectric crystals and mechanical movement. Contacting the transducers with hard or sharp objects should be avoided. Do not excessively flex the cables.

10.1.4 Care of Record Papers

When storing record paper (including used paper with traces):

Do not store in plastic envelopes.

Do not leave exposed to direct sunlight or ultraviolet light.

Do not exceed a storage temperature of 40 ºC (104 ºF).

Do not exceed a relative humidity of 80%.

Storage conditions outside these limits may distort the paper and adversely affect the accuracy of grid lines or make the trace unreadable.

10.1.5 Cleaning of the Recorder

The recorder platen, thermal print head and paper sensing mechanism must be cleaned at least once a year or when needed (when traces become faint).

To do this:

1) Clean the recorder platen with a lint-free cloth and soap/ water solution.

2) Wipe the thermal array using a cotton swab moistened with 70% Isopropyl alcohol-based solution.

3) Check the paper sensing mechanism is free of dust.

⚠WARNING⚠: Only use the record paper provided by EDAN, or it may damage the recorder. This kind of damage is not covered by warranty.

10.2 Cleaning

In order to avoid infection, clean and disinfect the monitor and accessories after each use.

10.2.1 Cleaning of the Monitor

Regular cleaning of the monitor enclosure and the screen is strongly recommended.

The solutions recommended for monitor cleaning are: soft soap water, Tensides, Ethylate and Acetaldehyde.

⚠WARNING⚠: Unplug the monitor from the AC power source and detach all accessories before cleaning. Do not immerse the unit in water or allow liquids to enter the case.

Clean the monitor enclosure with soft cloth and diluent non-caustic detergents recommended above.

Clean the screen with dry soft cloth.

CAUTION:

1) Although the monitor is chemically resistant to most common hospital cleaners and non-caustic detergents, different cleaners are not recommended and may stain the monitor.

2) Many cleansers must be diluted before use. Follow the manufacturer's directions carefully to avoid damaging the monitor.

3) Don't use strong solvent, for example, acetone.

4) Never use an abrasive such as steel wool or metal polish.

5) Do not immerse the monitor or any part of it into liquid. If any liquid enters the monitor, contact your distributor or EDAN service department.

6) Don't remain any cleaning solution on the surface of the monitor.

NOTES:

1) The monitor surface can be cleaned with hospital-grade ethanol and dried in air or with crisp and clean cloth.

2) EDAN has no responsibility for the effectiveness of controlling infectious disease using these chemical agents. Please contact infectious disease experts in your hospital for details.

10.2.2 Cleaning of the Accessories

(1) Cleaning of Transducers and ECG Leads

To clean the US transducer, TOCO transducer, IUP Probe, SpO_2 transducer, TEMP transducer, ECG leads and DECG Lead, follow these steps:

1) Wipe them with a soft cloth dampened in cleaning solution;
2) Clean them with a soft cloth dampened in water;
3) Air-dry them or wipe off the remained moisture with a soft dry cloth.

The recommended cleansers for accessories are list below:

Accessory	**Cleansers**
Ultrasound Transducer TOCO Transducer	BURATON LIQUID MIKROZID ETHANOL 70% SPORACIDIN CIDEX
DECG Leads	Mild alcohol-free soap water
IUP Probe	Mild alcohol-free soap water
ECG Leads	Mild soap water or ETHANOL 70%
Surface, Luminotron and Receiving Unit of the SpO_2 Transducer	Hospital-Grade Ethanol
TEMP Transducer	Hospital-Grade Ethanol

⚠CAUTION⚠:

1) Be sure the temperature of cleaning solutions does not exceed 45 ºC (113 ºF).

2) Do not immerse them in any liquid.

3) Only clean the out surface of the connectors, make sure no liquid goes into the connector.

4) When cleaning the temperature transducer, hold the tip of the sensor up and rub the cloth down toward the connector.

5) After cleaning, no remaining cleanser is allowed on the surface.

(2) Cleaning of Belt

Wash soiled belts with soap and water. The water temperature must not exceed 60 ºC (140 ºF).

(3) Cleaning of NIBP Cuff

The cuff can also be machine-washed or hand-washed. Hand-washing will prolong the life of the cuff.

Remove the latex rubber bag before washing; for machine-washing, close the Velcro fastening. Allow the cuff to dry thoroughly after washing; then reinsert the rubber bag.

CAUTION: Do not squeeze the rubber tube on the cuff.

CAUTION: Do not dry clean the cuff.

Replace the Rubber Bag in the Cuff

To replace the rubber bag in the cuff, first place the bag on the top of the cuff so that the rubber tubes line up with the large opening on the long side of the cuff. Now roll the bag lengthwise and insert it into the opening on the long side of the cuff. Hold the tubes and the cuff and shake the complete cuff until the bag is in position. Thread the rubber tubes from inside the cuff, and out through the small hole under the internal flap.

Figure 10-1 Replace the rubber bag in the cuff

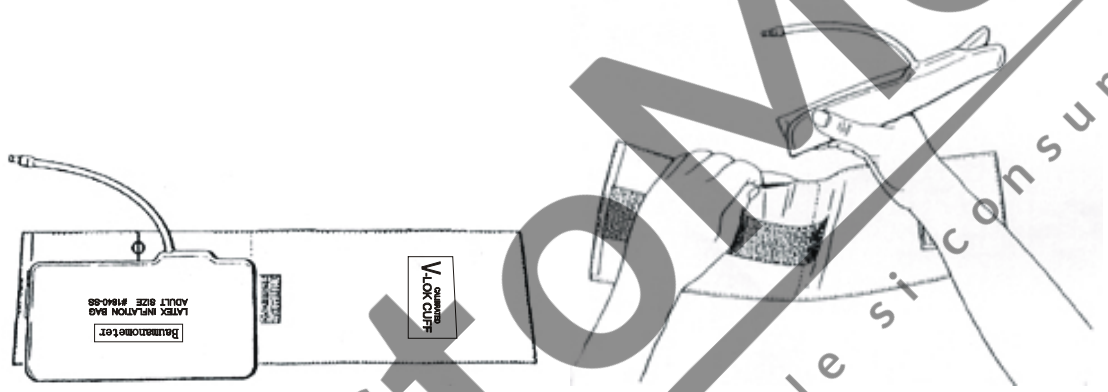

CAUTION:

1) **Only clean the out surface of the connectors, make sure no liquid goes into the connector.**
2) **When the reusable cuff is not connected with the monitor, or being cleaned, always place the cover on the rubber tube to avoid liquid permeation.**

10.3 Disinfecting

Clean the equipment before disinfecting.

The table below lists the allowed disinfectant bases:

Type	Base
Instrument Disinfectant	Glutaraldehyde up to 3.6%
Surface Disinfectant	Ethanol 1- and 2- Propanol

CAUTION:

1) Do not use any disinfectant containing additional active ingredients other than those listed.

2) Follow the manufacturer's instruction to dilute the solution, or adopt the lowest possible density.

3) Do not immerse any part of the monitor or any accessory into liquid.

4) After disinfection, no remaining disinfectant is allowed on the surface.

5) Check if the monitor and accessories are in good condition. If any aging or damage is detected, replace the damage part(s) or contact EDAN for service before reusing them.

NOTE: EDAN has no responsibility for the effectiveness of controlling infectious disease using these chemical agents. Please contact infectious disease experts in your hospital for details.

10.4 Sterilizing

Do not sterilize the monitor or the accessories, unless this is necessary according to your hospital regulation.

Chapter 11 Warranty and After-Sales Service

11.1 Warranty

EDAN's obligation under this warranty is limited to repairing, at EDAN's option, any part which upon EDAN's examination proves defective. If the product doesn't function as warranted during the warranty period, we will repair or replace it without charge.

Material and Manufacture

EDAN warrant that there's no defect in material and manufacture. During the warranty period, EDAN will repair or replace the defective part free if the defect has been confirmed as material or manufacture defect.

Software or Firmware

EDAN software and firmware products which are designated by EDAN for use with a hardware product, when properly installed on that hardware product, are warranted not to fail to execute their programming instructions due to defects in materials and workmanship. If EDAN receives notice of such defects during the warranty period that begins on the date of shipment, EDAN shall repair or replace software media or firmware which does not execute their programming instructions due to such defects. But EDAN doesn't warrant that operating of the hardware, software, or firmware shall be uninterrupted or free from error.

Note: The charges of freight and others are excluded under warranty.

This unit has no parts can be repaired by users themselves. All the service should be performed by authorized and qualified personnel.

Limit of Warranty

The warranty is void in the case of

- Assembly, extensions, readjustments of any parts;
- Modification and repair by unauthorized persons;
- Subsequent damage caused by improper use or maintenance;
- Replacement or remove of Serial number label and manufacturer label;

11.2 After-Sales Service

If you have any question about maintenance, technical specifications or malfunctions of devices, contact your local distributor or EDAN service department.

Call us at: +86-755-26898321, 26899221

Fax us at: +86-755-26882223, 26898330

Or send email to: support@edan.com.cn

Appendix 1 Product Specifications

A1.1 Monitor

Physical Characteristics	**Dimensions:** 347mm x 330mm x 126mm **Weight:** about 6 kg
Safety	**Comply with:** IEC/EN 60601-1: 1990 + A1:1993 + A2:1995, IEC/EN 60601-2-37:2001, IEC/EN 60601-1-1:2001, IEC/EN 60601-1-4:1997, IEC/EN 60601-1-2:2001, EN 61157:1995, YY 0449:2003, ISO10993-1:2003 **Anti-electric Shock Type:** Class I equipment with internal power supply **Anti-electric Shock Degree:** FHR1, FHR2, TOCO, FM, FS B IUP, SpO_2, NIBP BF DECG, ECG, TEMP CF **Degree of Protection against Harmful Ingress of Water:** Ordinary equipment (sealed equipment without liquid proof) **Degree of Safety in Presence of Flammable Gases:** Equipment not suitable for use in presence of flammable gases **Disinfection/Sterilizing Method:** Refer to this user manual for details **EMC:** Group I Class A **Working System:** Continuous running equipment
Power Supply	Operating Voltage: a.c.100V-240V Line Frequency: 50/60Hz P_{max} : 110VA Fuse: T1.6AL 250V
Environment	**Working** Temperature: 5 ºC ~ 40 ºC (41 ºF ~ 104 ºF) Relative Humidity: 25% ~ 80% (non-condensing) Atmospheric Pressure: 860hPa ~ 1060hPa **Transport and Storage** Temperature: -20 ºC ~ 55 ºC (-4ºF ~ 131 ºF) Relative Humidity: 25% ~ 93% (non-condensing) Atmospheric Pressure: 700hPa ~ 1060hPa

Display	LCD Size:	10.2” (Diagonal)
	Resolution:	800 × 3(RGB) × 480
	Display Mode:	Normally white, Transmissive
	Pixel Pitch:	0.0925(W) × 0.276(H) mm
	Active Area:	222.0(W) × 132.48(H) mm
	Module Size:	235.0(W) × 145.8(H) × 6.1(D) mm
	Surface treatment:	Anti-glare
	Color Arrangement:	RGB-Stripe
	Interface:	Digital
	Viewing angle:	+/- 65° Horizontal, 45°/-65° Vertical
	Response Time:	TrR = 15ms (typ.) / TrD = 20ms (Typ)
	Contrast Ratio:	300:1 (Typ.)
	Brightness:	350 cd/m2 (Typ.)
	Backlight power consumption:	4.098W (Typ.)
	Panel power consumption:	250mW (Typ.)
	Weight:	332g ± 10%
Recorder	American Standard:	
	Paper width:	152mm
	Effective printing width:	110mm
	FHR printout width:	70mm
	FHR scaling:	30bpm/cm
	International Standard:	
	Paper width:	152mm
	Effective printing width:	120mm
	FHR printout width:	80mm
	FHR scaling:	20bpm/cm
	TOCO printout width:	40mm
	TOCO scaling:	25%/cm
	Printing speed:	
	Standard Speed (Real-Time Traces):	1cm/min, 2cm/min, 3cm/min
	Fast Print Speed (Saved Traces):	Up to 25mm/sec
	Accuracy of data:	±5% (X axis) ±1% (Y axis)
	Resolution:	8dots/mm
	Record Information:	FHR1 trace/mark, FHR2/DECG trace/mark, TOCO/IUP trace, AFM trace, fetal movement mark, doctor event mark,

		AUTO-zero symbol, date, time, printing speed, ID, FHR2 Offset, HR, SpO_2, SYS, DIA, MAP, TEMP ect.
	Paper:	Z-fold, thermosensitive (compatible with GE and PHILIPS record papers)
Signal Interface	DB9 network interface, RJ45 interface	
Ultrasound	Technique:	Ultrasound Pulse Doppler with autocorrelation
	Pulse Repetition Rate:	2 KHz
	Pulse Duration:	92 μs
	Ultrasound Frequency:	1.0MHz±10%
	P- < 1 MPa	
	I_{ob} < 10 mW/cm^2	
	I_{spta} < 100 mW/cm^2	
	FHR Range:	50 bpm ~ 240 bpm
	Resolution:	1 bpm
	Accuracy:	±2 bpm
	Earth Leakage Current:	< 10 uA @ 264 VAC applied to transducer
	Dielectric Strength:	> 4000Vrms
DECG	Technique:	Peak-peak detection technique
	FHR range:	30bpm ~ 240bpm
	Resolution:	1bpm
	Accuracy:	±1bpm
	Input Impedance:	> 10M (Differential, DC50/60Hz)
	Input Impedance:	> 20M (Common Mode)
	CMRR:	> 110dB
	Noise:	< 4uVp (referred to input with 25k)
	Contact Potential Tolerance:	±500mV
	Fetal Input Voltage Current:	20uVp to 3mVp
	Patient Leakage Current:	< 10uArms@220V/50Hz
	Patient Auxiliary Current:	< 0.1uA (DC)
	Dielectric Strength:	4000Vrms (Spark-gap protected Isolations, Mains-patient)

TOCO	**External TOCO** Technique: Strain Gauge Sensor Element TOCO Range: 0-100 Relative (%), 135g strength corresponding to 100% Non-linear error: 10% Resolution: 1 count Zero mode Auto/Manual Earth Leakage Current: < 10 uA @ 264 VAC applied to transducer Dielectric Strength: > 4000Vrms **Internal TOCO** Pressure Range (IUP): 0-100mmHg Sensitivity: 5uV/V/mmHg Non-linear Error: ±1mmHg Resolution: 1% Zero Mode: Automatic / Manual
AFM	Technique: Pulsed Doppler ultrasound Range: 0-100 (%) Resolution: 1%
Marking	Manual fetal movement mark
ECG	**ECG Waveform** Manual control ECG waveform display ECG falls off: Detect automatically **HR Measuring** Display Range: 30 bpm ~ 240 bpm Measuring Accuracy: ±2 bpm
SpO_2	**SpO_2 Waveform** Display Range: 50% ~ 100% Resolution: 1% Measuring Accuracy: 90% ~ 100%: ± 2% 70% ~ 90%: ± 4% < 70%: unspecified Updating Time: About 1 second **PR Measuring** Display Range: 30 bpm ~ 240 bpm Measuring Accuracy: ±2 bpm

NIBP (for adult)	Display Range Systolic pressure: 30mmHg ~ 270mmHg Mean pressure: 10mmHg ~ 245mmHg Diastolic pressure: 20mmHg ~ 255mmHg Measuring Time: ≤120 seconds Software Over Voltage Limit: ≤ 297mmHg Hardware Over Voltage Protection: 325 ± 10mmHg Resolution: 1 mmHg Measuring Accuracy Max. average deviation ≤ ± 5mmHg Max. standard deviation ≤ 8mmHg
TEMP	Channel: 1 Measuring Range: 0 ºC ~ 50 ºC Accuracy: ± 0.2 ºC Responding Time: ≤ 3min Accessory: TEMP transducer

A1.2 Transducers and Cables

Ultrasound Transducer	Weight: 190g Cable Length: 2.5m Dimension: 88mm×35mm
TOCO Transducer	Weight: 180g Cable Length: 2.5m Dimension: 88mm×35mm
Remote Event Marker	Length: 2.5m Weight: 56g

A1.3 Rechargeable Lithium-ion Battery

Type	Rechargeable Lithium-ion Battery
Work Time	2 ~ 4 hours
Nominal Capacity	4000mAh
Nominal Voltage	14.8V
Charge Mode	Constant current/ constant voltage
Charge Current (Standard)	$0.2C_5A$ (800mA)
Charge Voltage (Standard)	(16.8±0.1V)
The Maximum Charge Current Continuously	2000mA
Storage Temperature	Short Term (within 1 month): -20 ºC ~ 60 ºC (-4 ºF ~ 140 ºF) Middle Term (within 3 months): -20 ºC ~ 45 ºC (-4 ºF ~ 113 ºF) Long Term (within 1 year): -20 ºC ~ 20 ºC (-4 ºF ~ 68 ºF) During storage, recharge the battery at least every six months.
Cycle Life	≥500 times

Appendix 2 Signal Input/Output Connector

Accessory equipment connected to these interfaces must be certified according to the respective IEC/EN standards (e.g. IEC/EN 60950 for data processing equipment and IEC/EN 60601-1 for medical equipment). Furthermore all configurations shall comply with the valid version of the system standard IEC/EN 60601-1-1. Everybody who connects additional equipment to the signal input connector or signal output connector configures a medical system, and is therefore responsible that the system complies with the requirements of the valid version of the system standard IEC/EN 60601-1-1. If in doubt, contact our technical service department or your local distributor.

DB9 Interface

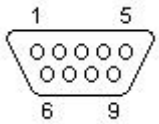

Pin	Signal	Input/Output
1	+5V	Output
2	Rx	Input
3	Tx	Output
4	485EN	Input
5	0V Ref.	
6	TA	Output
7	TB	Output
8	RA	Input
9	RB	Input

RJ45 Interface

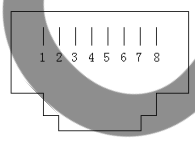

Pin	Signal	Input/Output
1	TD+	Output
2	TD-	Output
3	RD+	Input
4	Reserved	
5	Reserved	
6	RD-	Input
7	Reserved	
8	Reserved	

Appendix 3 Troubleshooting

A3.1 No Display

Phenomenon	Possible Cause	Solution
Power indicator is off.	Power cable is loose.	Tighten the power cable.
	The fuse is blown.	Change the fuse.
	The battery is run out of power	Connect to AC power supply.

A3.2 Noise

Phenomenon	Possible Cause	Solution
Noise	Too high volume setup.	Turn down the volume.
	Interfered by mobile phone or other interfering source.	Keep the interfering source far away from the monitor.

A3.3 Recorder Error

Phenomenon	Possible Cause	Solution
Paper jam	Wrong loading paper or paper is dampened.	Load paper correctly and keep paper from moist.
Recorder does not work.	The recorder is not started.	Press the **PRINT** key.
	Run out of paper.	Load paper.
	The paper drawer is not locked.	Slide the paper drawer in until both latches are locked in position.

A3.4 Trouble with Ultrasound FHR Monitoring

Phenomenon	Possible Cause	Solution
Inconstant trace / display	The pregnant woman is too fat.	Monitor FHR with DECG.
	Improper ultrasound transducer position.	Adjust the position of the transducer till the better signal is received.
	Loose belt.	Tighten the belt.
	Superfluous aquasonic coupling gel.	Wipe off superfluous aquasonic coupling gel.
	Frequent fetal movements.	Delay the monitoring.
	Maternal movement.	Request the patient to calm down and stay still.
	Inadequate aquasonic coupling gel.	Use recommended aquasonic coupling gel quantity.
Doubtful FHR	Record maternal heart rate wrongly.	Change the position of the ultrasound transducer.
	The transducer is not well placed in position, and the mixed noise has been recorded	Adjust the position of the transducer.
Feint trace or no trace	Improper paper	Use paper recommended by the manufacturer
	The paper drawer is not locked.	Slide the paper drawer in until both latches are locked in position.
	Adjusting nuts of the print head are unbalanced.	Contact EDAN for service.

A3.5 Troubles with DECG FHR Monitoring

Symptom	Possible Cause	Solution
Inconstant trend Inconstant display	No ECG signal	Use a new spiral electrode
	Bad contact of reference electrode and patient	Use a new spiral electrode
Inconstant trend	The DECG cable has not been fixed firmly	Fix an attachment pad at the DECG cable.

A3.6 Troubles with Contractions Monitoring (External)

Phenomenon	Possible Cause	Solution
Bad trace quality or fluctuant TOCO baseline	The belt is too tight or too loose.	Adjust the belt.
	The belt has no elasticity.	Renew the belt.
	Maternal movement	Request the patient to calm down and stay still.
	Frequent fetal movements.	Delay the monitoring.
Too high TOCO sensitivity (higher than 100 unit)	The body pressure from uterus to TOCO transducer is far higher than the average value.	Insure favorable contact for patient skin with TOCO transducer. Change the position of TOCO transducer, if necessary.

A3.7 Troubles with Monitoring Contractions (Internal)

Symptom	Possible Cause	Solution
No trend	The intrauterine catheter is jammed	Wash with disinfector
No pressure change when uterine contraction	"Dry" environment or the tip of intrauterine catheter is placed extraovularly	Wash with disinfector or change the position of transducer
Only see the IUP peak but no baseline	Zero adjustment is wrong	Zero the system
The trend is a beeline	The connector failure.	Move or contact catheter. If trend no fluctuation, change intrauterine cable.

A3.8 Big ECG Signal Interference or Thick Baseline

Phenomenon	Possible Cause	Solution
Big ECG signal interference or thick baseline	Abnormal electrodes placing or electrodes invalidation	Check the electrodes placing and the period of validity of electrodes
	The cable connector is not well connected	Check the connection of cable connector
	Power socket has no standard ground wire	Check if power socket has standard ground wire
	The special ground wire connecting with monitor is not properly earthed	Check if the special ground wire connecting with monitor is earthed

A3.9 NIBP and SpO_2 No Results

Phenomenon	Possible Cause	Solution
NIBP and SpO_2 have no results	The NIBP cuff is not properly wrapped to the position of patient's arm	Check if the NIBP cuff is properly wrapped to the position of patient's arm
	The NIBP can not be inflated.	Extend catheter, and check the connection
	Hose connector plug is not connected well with the NIBP socket	Check if the hose connector plug is connected well with the NIBP socket
	SpO_2 transducer is not connected well with the SpO_2 socket	Check if the SpO_2 transducer is connected well with the SpO_2 socket
	Abnormal working condition	Shut off the power, then switch on it again

A3.10 Blown Fuses

Replace the blown fuse when needed.

The two fuses of F6 monitor are located on the bottom panel, their specifications are:

Size: Φ5mm*20mm; Model: T1.6AL 250V.

To replace a fuse:

- Fold the LCD display completely flat.
- Carefully place the monitor upside down on a flat surface covered with cloth or other protecting pad.
- Remove the blown fuse by unscrewing it anticlockwise with a flat-head screw driver.
- Place a new fuse that is supplied by EDAN or of the same specification.
- Screw the new fuse tight in position clockwise with the screw driver.

NOTE:

Switch off the monitor and unplug it before changing the fuse.

Appendix 4 EMC Information – Guidance and Manufacture's Declaration

A4.1 Electromagnetic Emissions – for all EQUIPMENT and SYSTEMS

Guidance and manufacture's declaration – electromagnetic emission		
The *F6 Fetal & maternal Monitor* is intended for use in the electromagnetic environment specified below. The customer of the user of the F6 Fetal & maternal should assure that it is used in such and environment.		
Emission test	**Compliance**	**Electromagnetic environment – guidance**
RF emissions CISPR 11	Group 1	The *F6 Fetal & maternal Monitor* uses RF energy only for its internal function. Therefore, its RF emissions are very low and are not likely to cause any interference in nearby electronic equipment.
RF emission CISPR 11	Class A	The *F6 Fetal & maternal Monitor* is suitable for use in all establishments, other than domestic and those directly connected to the public low-voltage power supply network that supplies buildings used for domestic purposes.
Harmonic emissions IEC 61000-3-2	Class A	
Voltage fluctuations/ flicker emissions IEC 61000-3-3	Complies	

A4.2 Electromagnetic Immunity – for all EQUIPMENT and SYSTEMS

Guidance and manufacture's declaration – electromagnetic immunity			
The *F6 Fetal & maternal Monitor* is intended for use in the electromagnetic environment specified below. The customer or the user of F6 *Fetal & maternal Monitor* should assure that it is used in such an environment.			
Immunity test	**IEC 60601 test level**	**Compliance level**	**Electromagnetic environment - guidance**
Electrostatic discharge (ESD) IEC 61000-4-2	± 6 kV contact ± 8 kV air	± 6 kV contact ± 8 kV air	Floors should be wood, concrete or ceramic tile. If floor are covered with synthetic material, the relative humidity should be at least 30%.
Electrical fast transient/burst IEC 61000-4-4	± 2 kV for power supply lines	± 2V for power supply lines	Mains power quality should be that of a typical commercial or hospital environment.
Surge IEC 61000-4-5	± 1 kV differential mode ± 2 kV common mode	± 1 kV differential mode ± 2 kV common mode	Mains power quality should be that of a typical commercial or hospital environment.
Power frequency (50Hz, 60Hz) magnetic field IEC61000-4-8	3 A/m	3 A/m	Power frequency magnetic fields should be at levels characteristic of a typical location in a typical commercial or hospital environment.

Voltage dips, short interruptions and voltage variations on power supply input lines IEC 61000-4-11	< 5% U_T (> 95% dip in U_T) for 0.5 cycle 40% U_T (60% dip in U_T) for 5 cycles 70% U_T (30% dip in U_T) for 25 cycles < 5% U_T (> 95% dip in U_T) for 5 sec	< 5% U_T (> 95% dip in U_T) for 0.5 cycle 40% U_T (60% dip in U_T) for 5 cycles 70% U_T (30% dip in U_T) for 25 cycles < 5% U_T (> 95% dip in U_T) for 5 sec	Mains power quality should be that of a typical commercial or hospital environment. If the user of the F6 Fetal & maternal Monitor requires continued operation during power mains interruptions, it is recommended that the F6 Fetal & maternal Monitor be powered from an uninterruptible power supply or a battery.
NOTE: U_T is the a.c. mains voltage prior to application of the test level.			

A4.3 Electromagnetic Immunity – for EQUIPMENT and SYSTEM that are not LIFE-SUPPORTING

Guidance and manufacture's declaration – electromagnetic immunity			
The *F6 Fetal & maternal Monitor* is intended for use in the electromagnetic environment specified below. The customer or the user of *F6 Fetal & maternal Monitor* should assure that it is used in such an environment.			
Immunity test	**IEC 60601 test level**	**Compliance level**	**Electromagnetic environment - guidance**
Conducted RF IEC 61000-4-6 Radiated RF IEC 61000-4-3	3 V_{rms} 150 kHz to 80 MHz 3 V/m 80 MHz to 2.5 GHz	$3V_{rms}$ 3 V/m	Portable and mobile RF communications equipment should be used no closer to any part of the *F6 Fetal & maternal Monitor* including cables, than the recommended separation distance calculated from the equation applicable to the frequency of the transmitter. **Recommended separation distance** $d = \left[\frac{3.5}{V_1}\right]\sqrt{P}$ $d = \left[\frac{3.5}{E_1}\right]\sqrt{P}$ 80 MHz to 800 MHz $d = \left[\frac{7}{E_1}\right]\sqrt{P}$ 800 MHz to 2.5 GHz Where *P* is the maximum output power rating of the transmitter in watts (W) according to the transmitter manufacturer and *d* is the recommended separation distance in meters (m). Field strengths from fixed RF transmitters, as determined by an electromagnetic site survey,[a)] should be less than the compliance level in each frequency range.[b)] Interference may occur in the vicinity of equipment marked with the following symbol: 

NOTE 1: At 80 MHz and 800 MHz, the higher frequency range applies. **NOTE 2:** These guidelines may not apply in all situations. Electromagnetic propagation is affected by absorption and reflection from structures, objects and people.
a) Field strengths from fixed transmitters, such as base stations for radio (cellular/cordless) telephones and land mobile radios, amateur radio, AM and FM radio broadcast and TV broadcast cannot be predicted theoretically with accuracy. To assess the electromagnetic environment due to fixed RF transmitters, an electromagnetic site survey should be considered. If the measured field strength in the location in which the F6 Fetal & maternal *Monitor* is used exceeds the applicable RF compliance level above, the *F6 Fetal & maternal Monitor* should be observed to verify normal operation. If abnormal performance is observed, additional measures may be necessary, such as reorienting or relocating the *F6 Fetal & maternal Monitor*. b) Over the frequency range 150 kHz to 80 MHz, field strengths should be less than 3 V/m.

A4.4 Recommended Separation Distance

Recommended separation distances between portable and mobile RF communications equipment and the *F6 Fetal & maternal Monitor*

The *F6 Fetal & maternal Monitor* is intended for use in an electromagnetic environment in which radiated RF disturbances are controlled. The customer or the user of the *F6 Fetal & maternal Monitor* can help prevent electromagnetic interference by maintaining a minimum distance between portable and mobile RF communications equipment (transmitters) and the *F6 Fetal & maternal Monitor* as recommended below, according to the maximum output power of the communications equipment.

Rated maximum output power of transmitter (W)	**Separation distance according to frequency of transmitter (m)**		
	150 kHz to 80 MHz $d = \left[\frac{3.5}{V_1}\right]\sqrt{P}$	**80 MHz to 800 MHz** $d = \left[\frac{3.5}{E_1}\right]\sqrt{P}$	**800 MHz to 2.5 GHz** $d = \left[\frac{7}{E_1}\right]\sqrt{P}$
0.01	**0.12**	**0.12**	**0.23**
0.1	**0.37**	**0.37**	**0.73**
1	**1.2**	**1.2**	**2.3**
10	**3.7**	**3.7**	**7.3**
100	**12**	**12**	**23**

For transmitters rated at a maximum output power not listed above, the recommended separation distance d in meters (m) can be estimated using the equation applicable to the frequency of the transmitter, where P is the maximum output power rating of the transmitter in watts (W) according to the transmitter manufacturer.

NOTE 1: At 80 MHz and 800 MHz, the separation distance for the higher frequency range applies.
NOTE 2: These guidelines may not apply in all situations. Electromagnetic propagation is affected by absorption and reflection from structures, objects and people.

EDAN INSTRUMENTS, INC.

3/F-B, Nanshan Medical Equipments Park, Nanhai Rd 1019#, Shekou,
Nanshan Shenzhen, 518067 P.R. CHINA
TEL: +86-755-26882220 FAX: +86-755-26882223

EC REPRESENTATIVE

Shanghai International Holding Corp. GmbH (Europe)

Eiffestrasse 80, D-20537 Hamburg Germany
TEL: +49-40-2513175 FAX: +49-40-255726
E-mail: antonjin@yahoo.com.cn